ATHI WATER WORKS DEVELOPMENT AGENCY
Nairobi
Republic of Kenya

Financial Cooperation between Kenya and Germany
With Support of KfW Development Bank

NAIROBI SATELLITE TOWNS WATER AND SANITATION DEVELOPMENT PROGRAMME; PHASE 1

Construction of Mwihoko Water Supply Project – Lot 4
BMZ No. 2013.6543.6
TENDER No. AWWDA/KfW/NST /LOT 4/2023

BIDDING DOCUMENT, FINAL
VOLUME III, ENGINEERING DRAWINGS

MARCH, 2023

DRAWING LIST (23-03-2023)

DRWING NO.	TITLE
	GENERAL
MW04/GEN/LYTPLN/01	GENERAL PROJECT LAYOUT
	RING MAINS
MW04/RM/KSM/02	KAHAWA SUKARI - MWIHOKO A RING MAIN - GENERAL LAYOUT
MW04/RM/KSM/03	KAHAWA SUKARI - MWIHOKO A RING MAIN CH 0+000 - 1+400
MW04/RM/KSM/04	KAHAWA SUKARI - MWIHOKO A RING MAIN CH 1+400 - 2+800
MW04/RM/KSM/05	KAHAWA SUKARI - MWIHOKO A RING MAIN CH 2+800 - 4+200
MW04/RM/KSM/06	KAHAWA SUKARI - MWIHOKO A RING MAIN CH 4+200 - 5+400
MW04/RM/KSM/07	KAHAWA SUKARI - MWIHOKO A RING MAIN CH 5+400 - 6+900
	MWIHOKO A RING MAIN 01
MW04/RM/MA1/08	MWIHOKO A RING MAIN 01 CH 0+000 - 1+200
	MWIHOKO A RING MAIN 02
MW04/RM/MA2/09	MWIHOKO A RING MAIN 02 - GENERAL LAYOUT
MW04/RM/MA2/10	MWIHOKO A RING MAIN 02 CH 0+000 - 1+200
MW04/RM/MA2/11	MWIHOKO A RING MAIN 02 CH 1+200 - 2+062
	DISTRIBUTION NETWORK
MW04/DNS/12	OVERVIEW OF DISTRIBUTION SHEETS

	DISTRIBUTION NETWORK
MW04/DNS/13	DISTRIBUTION SHEET 1 - LAYOUT - MWA-01
MW04/DNS/14	DISTRIBUTION SHEET 1 - LAYOUT - MWA-02
MW04/DNS/15	DISTRIBUTION SHEET 2 - LAYOUT -MWA-03
MW04/DNS/16	DISTRIBUTION SHEET 2 - LAYOUT - MWA-04
MW04/DNS/17	DISTRIBUTION SHEET 2 - NODE DETAILS
	STANDARD DRAWINGS
MW04/SD/18	MARKER POST DETAILS FOR STANDARD PIPE,FIRE HYDRANT,AIR AND SLUICE VALVE
MW04/SD/19	ROAD, RIVER AND RAILWAY CROSSING DETAILS
MW04/SD/20	THRUST & ANCHOR BLOCKS FOR HORIZONTAL BENDS, SLUICE VALVES,TEES & TAPERS
MW04/SD/21	THRUST BLOCKS FOR VERTICAL BENDS, AND BLANK ENDS
MW04/SD/22	FIRE HYDRANT, WASHOUTS CHAMBERS DETAILS
MW04/SD/23	AIR VALVE & SLUICE VALVE CHAMBER DETAILS
MW04/SD/24	STANDARD MANHOLES AND INSPECTION CHAMBERS DETAILS
MW04/SD/25	STANDARD MANHOLES AND INSPECTION CHAMBERS DETAILS
MW04/SD/26	TYPICAL TRENCHES, REINSTATEMENT DETAILS , STORMWATER CHANNEL CROSSINGS
MW04/SD/27	BURIED SECTIONAL VALVE
MW04/SD/28	TYPICAL CONSUMER CONNECTION
MW04/SD/29	PROJECT SIGNBOARD
MW04/SD/30	PRECAST TUNNEL LINING SEGMENTS
MW04/SD/31	PRV& FLOW METER CHAMBER DETAILS

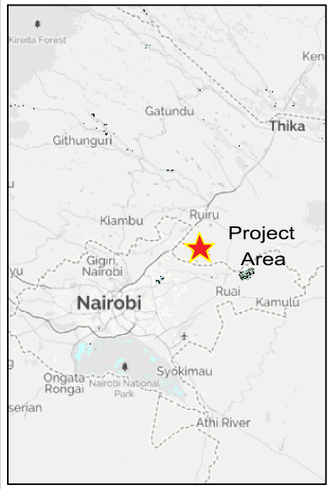

PROJECT AREA

0 1 2 Kilometers

N

REVISIONS

REV.No.	DATE	DESCRIPTION

Client

ATHI WATER WORKS DEVELOPMENT AGENCY

Project

NAIROBI SATELLITE TOWNS WATER & SANITATION DEV. PROGRAMME
MWIHOKO WATER SUPPLY PROJECT

CONSULTANTS

Pasch+Partners consulting engineers *in Association with* Norken International Ltd

Drawing Title

DRAWING LIST

CHIEF ENGINEER AG	Designed by EK Checked by JWK
Scale AS SHOWN	Date MARCH 2023
Job No. MW04	
T0 Status	DRAWING No. MW04/GEN/LYTPL/01

GENERAL

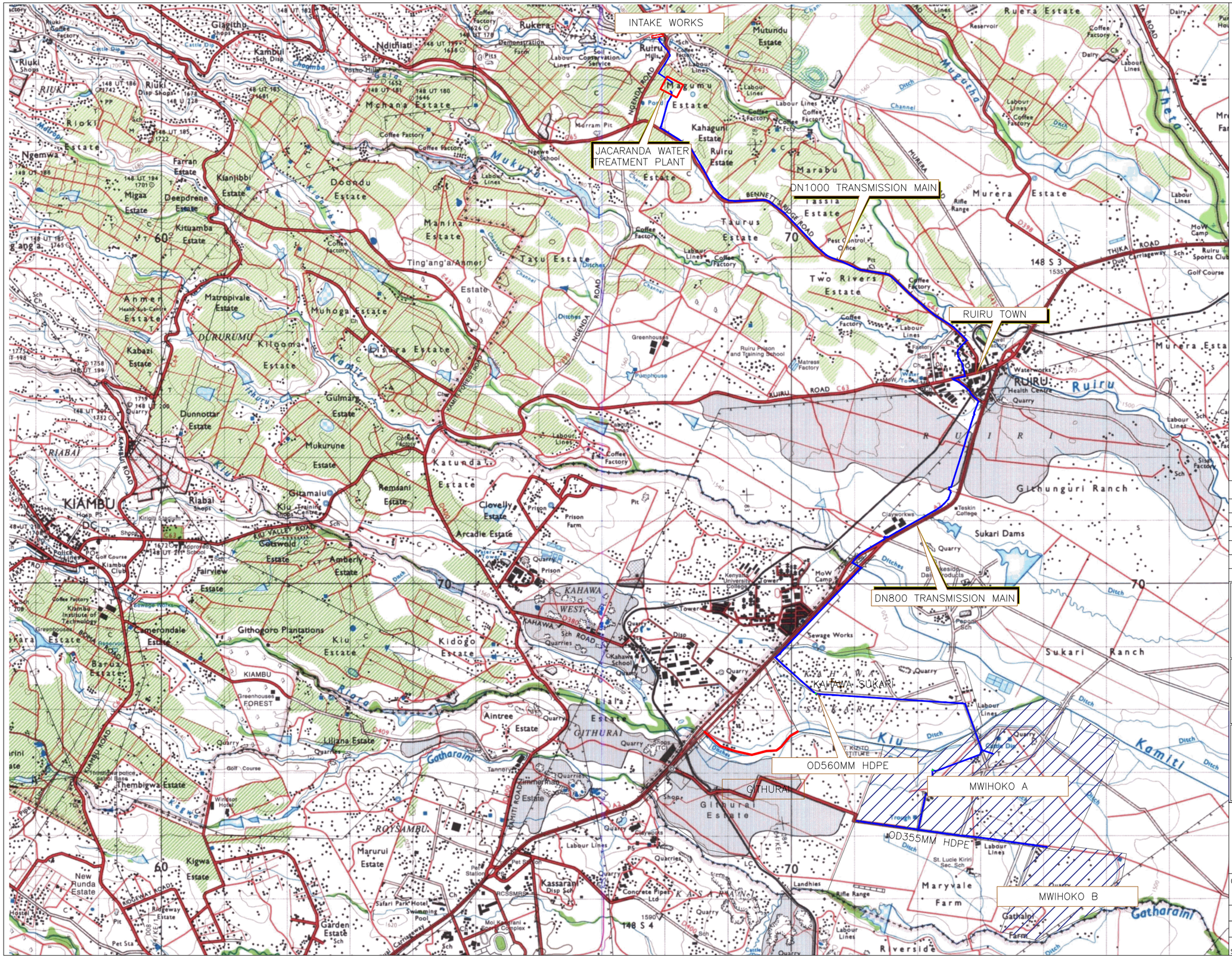

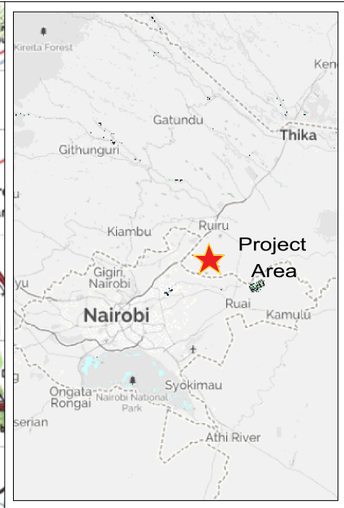

PROJECT AREA

0 1 2 Kilometers

N

REVISIONS

REV.No.	DATE	DESCRIPTION

Client

ATHI WATER WORKS

ATHI WATER WORKS DEVELOPMENT AGENCY

Project

NAIROBI SATELLITE TOWNS WATER & SANITATION DEV. PROGRAMME
MWIHOKO WATER SUPPLY PROJECT

CONSULTANTS

Pasch+Partners consulting engineers in Association with Norken International Ltd

Drawing Title

PROJECT GENERAL LAYOUT

CHIEF ENGINEER	AG	Designed by	EK
		Checked by	JWK
Scale	AS SHOWN	Date	
Job No.	MW04		MARCH 2023
T0 Status	DRAWING No.	MW04/GEN/LYTPL/01	

RING MAINS

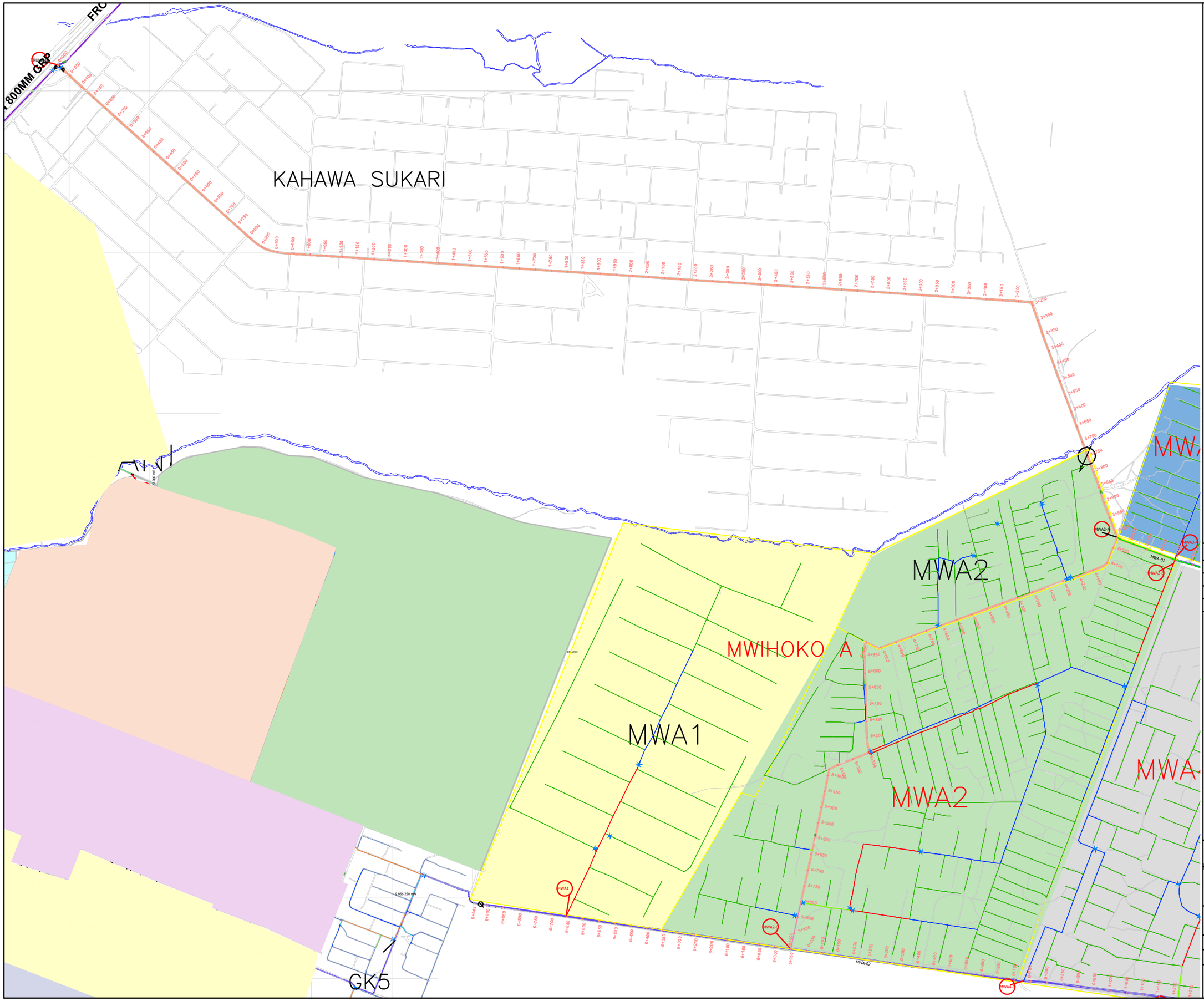

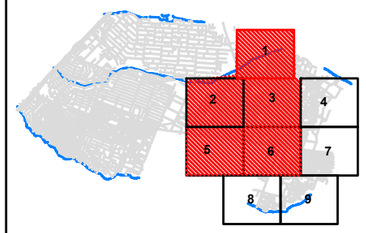

LEGEND:

- OD63
- OD90
- OD110
- OD160
- OD225
- OD355
- DN400
- OD560
- OD 630

NODE LABLE

DN – NOMINAL DIAMETER (STEEL)

OD – OUTSIDE DIAMETER (HDPE)

FLOW METER

PRESSURE REDUCING VALVE

DISTRICT METERED AREA (DMA)

N

40 0 40 80 120M

REVISIONS

REV.No.	DATE	DESCRIPTION

Client

ATHI WATER WORKS
Accelerating Access to Water and Sanitation

ATHI WATER WORKS DEVELOPMENT AGENCY

Project

NAIROBI SATELLITE TOWNS WATER & SANITATION DEV. PROGRAMME
MWIHOKO WATER SUPPLY PROJECT

CONSULTANTS

Posch+Partners consulting engineers in Association with Norken International Ltd

Drawing Title

KAHAWA SUKARI - MWIHOKO A RINGS MAINS GENERAL LAYOUT
0+000 - 6+943

CHIEF ENGINEER: AG	Designed by EK
	Checked by JWK
Scale 1:2000	Date: MARCH 2023
Job No. P1596	

DRAWING No. MW04/RM/KSM/02

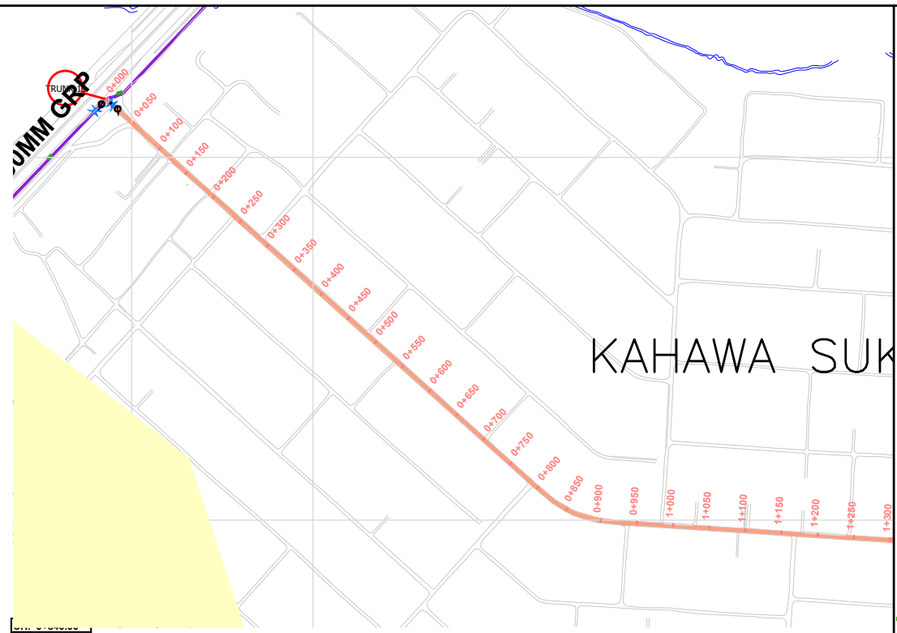

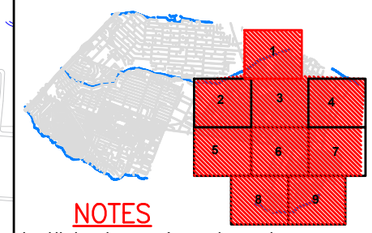

NOTES

1. All levels are in metres above ordinary datum
2. Precise location of air valves, washouts,bends and other fittings to be determined on site
3. Ground and invert level shown are only indicative. Final levels to be confirmed by the Contractor in liaison with the Engineer
4. Pipes are to be laid to even gradients with a minimum cover of 0.6m (Fields), 0.9m (Wayleaves), 1.5m (Under Roads)
5. All bends are horizontal unless otherwise Stated

LEGEND:

- OD63
- OD90
- OD110
- OD160
- OD225
- OD355
- DN400
- OD560
- OD 630
- NODE LABLE
- DN – NOMINAL DIAMETER (STEEL)
- OD – OUTSIDE DIAMETER (HDPE)
- FLOW METER
- BURIED VALVES
- PRESSURE REDUCING VALVE
- DISTRICT METERED AREA (DMA)

N

40 0 40 80 120M

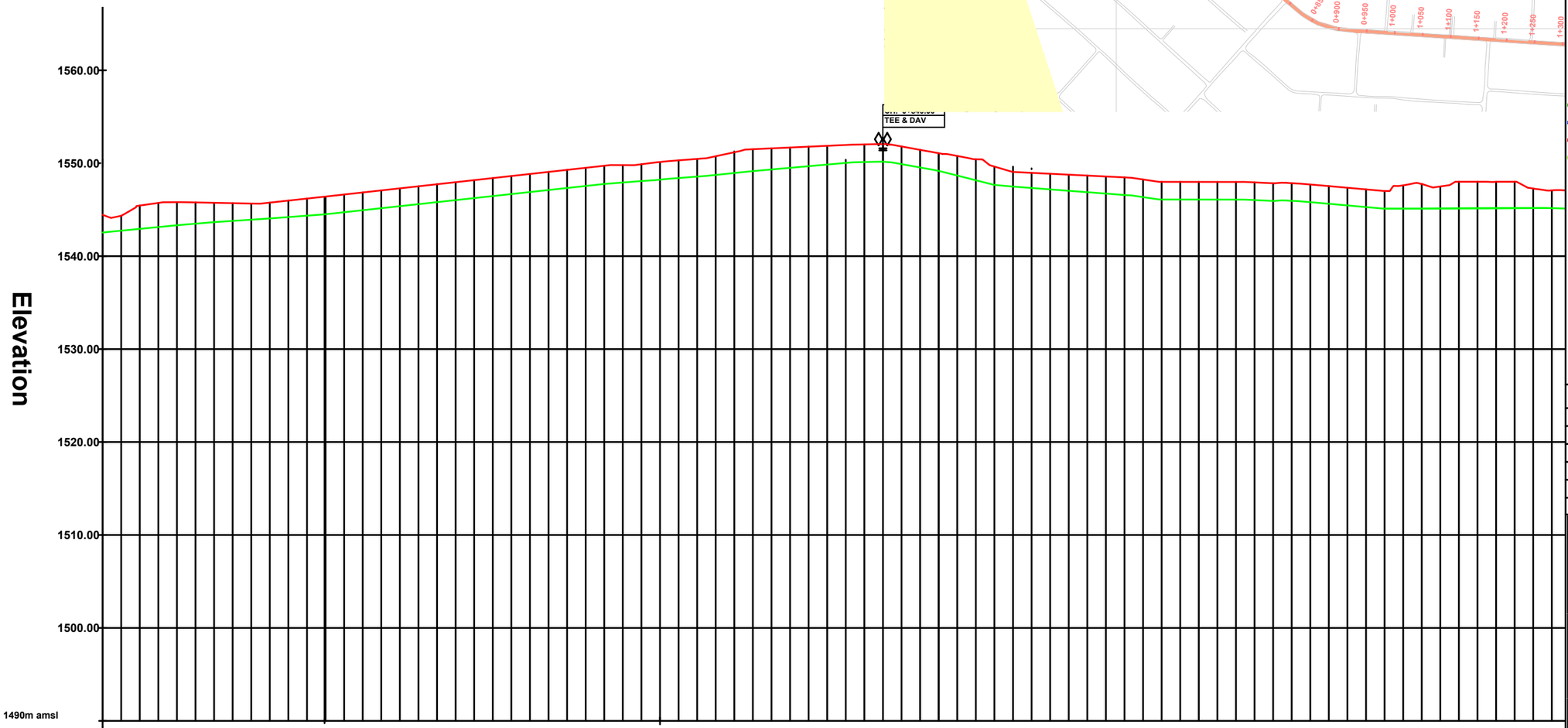

CHAINAGE (m)	GROUND LEVEL (m amsl)	INVERT LEVEL (m amsl)	TRENCH DEPTH (m)
0+000	1534.34	1532.09	2.35
0+020	1534.34	1532.35	1.99
0+040	1535.44	1532.79	2.65
0+060	1535.73	1533.13	2.60
0+080	1535.80	1533.32	2.48
0+100	1535.78	1533.50	2.27
0+120	1535.74	1533.66	2.08
0+140	1535.70	1533.80	1.90
0+160	1535.66	1533.92	1.73
0+180	1535.76	1534.06	1.71
0+200	1535.98	1534.18	1.80
0+220	1536.19	1534.32	1.88
0+240	1536.41	1534.45	1.95
0+260	1536.63	1534.59	2.04
0+280	1536.85	1534.73	2.12
0+300	1537.07	1534.90	2.17
0+320	1537.29	1535.07	2.22
0+340	1537.51	1535.25	2.26
0+360	1537.74	1535.43	2.31
0+380	1537.96	1535.60	2.35
0+400	1538.18	1535.78	2.40
0+420	1538.40	1535.96	2.44
0+440	1538.62	1536.14	2.48
0+460	1538.84	1536.34	2.50
0+480	1539.06	1536.53	2.53
0+500	1539.28	1536.73	2.55
0+520	1539.50	1536.93	2.58
0+540	1539.72	1537.13	2.60
0+560	1539.80	1537.32	2.47
0+580	1539.89	1537.52	2.37
0+600	1540.13	1537.75	2.38
0+620	1540.30	1537.98	2.32
0+640	1540.46	1538.22	2.24
0+660	1540.75	1538.45	2.30
0+680	1541.18	1538.70	2.48
0+700	1541.50	1538.95	2.55
0+720	1541.59	1539.21	2.39
0+740	1541.69	1539.46	2.23
0+760	1541.78	1539.71	2.06
0+780	1541.87	1539.97	1.90
0+800	1541.96	1540.22	1.74
0+820	1542.02	1540.47	1.55
0+840	1542.05	1540.67	1.39
0+860	1541.80	1540.71	1.09
0+880	1541.44	1540.32	1.12
0+900	1541.07	1539.86	1.22
0+920	1540.78	1539.40	1.38
0+940	1540.42	1538.95	1.47
0+960	1539.64	1538.49	1.15
0+980	1539.06	1538.03	1.02
1+000	1538.96	1537.58	1.38
1+020	1538.86	1537.26	1.60
1+040	1538.76	1536.96	1.80
1+060	1538.67	1536.76	1.90
1+080	1538.57	1536.56	2.01
1+100	1538.47	1536.44	2.03
1+120	1538.25	1536.32	1.93
1+140	1537.99	1536.20	1.79
1+160	1537.99	1536.08	1.91
1+180	1537.99	1535.92	2.07
1+200	1537.99	1535.75	2.23
1+220	1537.98	1535.89	2.01
1+240	1537.93	1535.43	1.99
1+260	1537.84	1535.27	1.88
1+280	1537.85	1535.12	1.99
1+300	1537.71	1534.90	2.01
1+320	1537.53	1534.84	1.82
1+340	1537.36	1534.71	1.86
1+360	1537.18	1534.57	1.88
1+380	1537.01	1534.43	1.82
1+400	1537.62	1534.30	1.93
1+420	1537.77	1534.18	1.82
1+440	1537.50	1534.08	1.86
1+460	1538.00	1533.98	1.89
1+480	1538.00	1533.88	1.82
1+500	1537.99	1533.78	1.93
1+520	1538.00	1533.68	1.82
1+540	1537.27	1533.69	1.86
1+560	1537.08	1533.48	1.88

PIPE DETAILS

FITTINGS: DAV

HYDRAULIC GRADIENT (%)

CROSSINGS: ROAD CROSSING (0+360); ROAD CROSSING (0+800); ROAD CROSSING (1+200)

REVISIONS

REV.No.	DATE	DESCRIPTION

Client

ATHI WATER
Transforming Life. Inspiring Progress

ATHI WATER WORKS DEVELOPMENT AGENCY

Project

NAIROBI SATELLITE TOWNS WATER & SANITATION DEV. PROGRAMME
MWIHOKO WATER SUPPLY PROJECT

CONSULTANTS

in Association with

Norken International Ltd
CONSULTING ENGINEERS/ ENVIRONMENTAL CONSULTANTS
Dunhill Towers Block A 3rd Floor
P.O. Box 21582-00505 Nairobi
Tel: +254 (0)20 2729000/2729001
Cell: +254 (0)722 206 722/+254 (0)733 206 722
Email: info@norken.co.ke Website: www.norken.co.ke

Drawing Title

KAHAWA SUKARI - MWIHOKO A RINGMAIN
LONGITUDINAL PROFILE
0+000 - 1+400

CHIEF ENGINEER: AG	Designed by EK
	Checked by JWK
Scale 1:2000	Date: MARCH 2023
Job No. P1596	

DRAWING No. MW04/RM/KSM/03

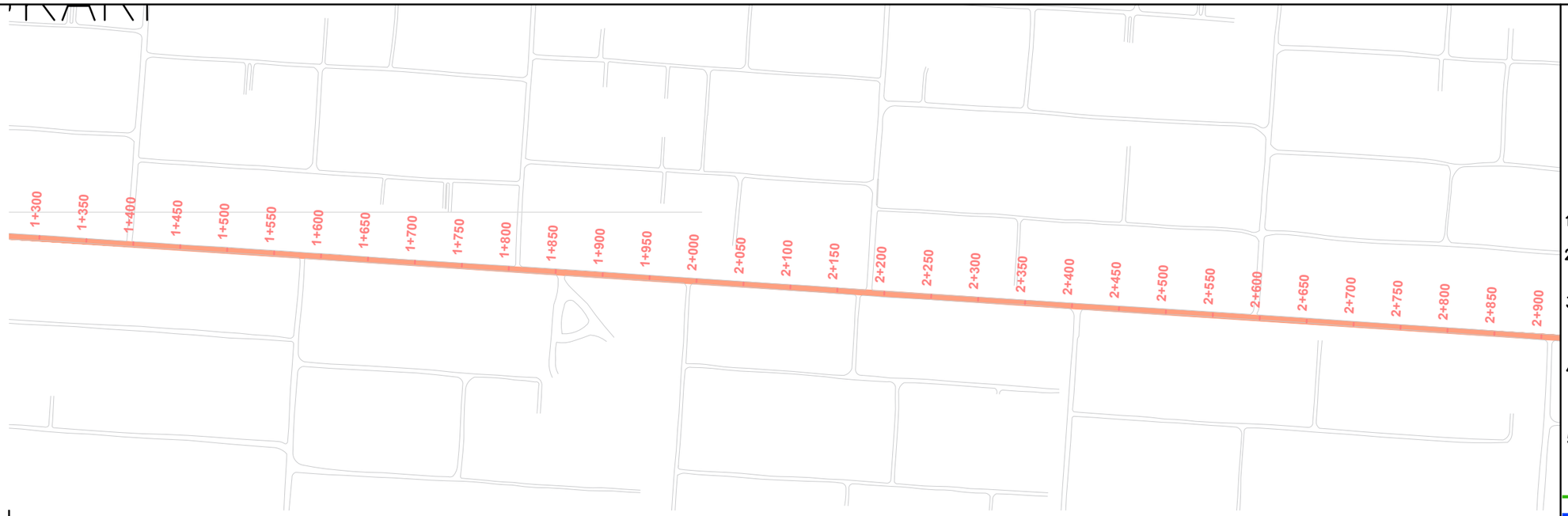

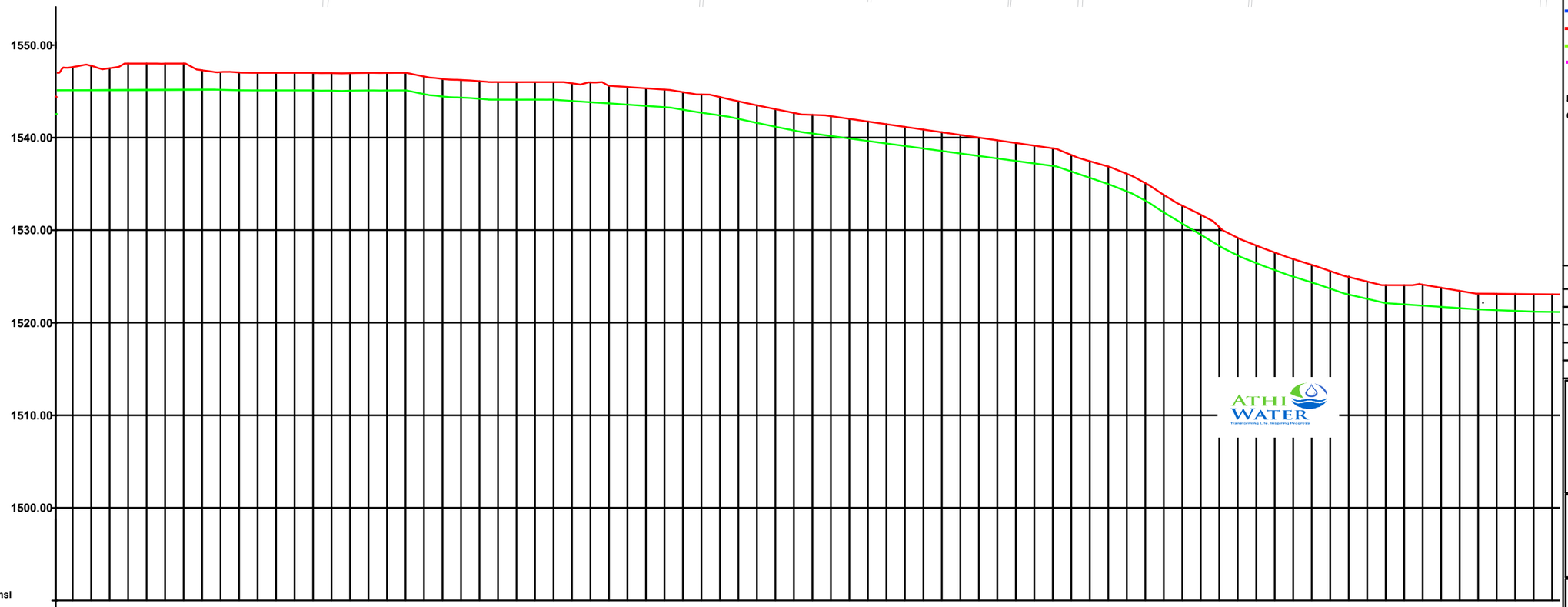

DATUM 1490m amsl

CHAINAGE (m)	GROUND LEVEL (m amsl)	INVERT LEVEL (m amsl)	TRENCH DEPTH (m)
1+400	1537.62	1534.30	1.93
1+420	1537.77	1534.18	1.82
1+440	1537.50	1534.08	1.86
1+460	1538.00	1533.98	1.88
1+480	1538.00	1533.88	1.82
1+500	1537.99	1533.78	1.93
1+520	1538.00	1533.68	1.82
1+540	1537.27	1533.59	1.86
1+560	1537.08	1533.48	1.88
1+580	1537.03	1533.37	1.82
1+600	1537.00	1533.26	1.93
1+620	1537.00	1533.16	1.88
1+640	1537.00	1533.05	1.88
1+660	1536.99	1532.94	1.92
1+680	1536.97	1532.84	1.90
1+700	1536.96	1532.71	1.89
1+720	1536.99	1532.57	1.88
1+740	1536.99	1532.44	1.92
1+760	1536.99	1532.30	1.90
1+780	1536.60	1532.16	1.89
1+800	1536.34	1532.03	1.88
1+820	1536.22	1531.90	1.92
1+840	1536.09	1531.81	1.90
1+860	1536.00	1531.72	1.89
1+880	1535.99	1531.64	1.88
1+900	1535.99	1531.55	1.92
1+920	1536.00	1531.47	1.90
1+940	1535.86	1531.38	1.89
1+960	1535.96	1531.32	1.88
1+980	1535.60	1531.27	1.92
2+000	1535.46	1531.23	1.90
2+020	1535.32	1531.18	1.89
2+040	1535.18	1531.08	1.88
2+060	1534.91	1530.97	1.92
2+080	1534.66	1530.87	1.90
2+100	1534.38	1530.70	1.89
2+120	1533.92	1530.51	1.88
2+140	1533.49	1530.32	1.90
2+160	1533.07	1530.13	1.89
2+180	1532.67	1529.93	1.92
2+200	1532.45	1529.80	1.91
2+220	1532.32	1529.67	1.88
2+240	1532.03	1529.54	1.87
2+260	1531.74	1529.41	1.92
2+280	1531.45	1529.21	1.93
2+300	1531.16	1528.89	1.94
2+320	1530.87	1528.57	1.99
2+340	1530.58	1528.25	2.01
2+360	1530.29	1527.93	2.11
2+380	1530.00	1527.55	1.94
2+400	1529.71	1527.09	1.99
2+420	1529.42	1526.62	2.01
2+440	1529.13	1526.06	2.11
2+460	1528.84	1525.37	1.94
2+480	1528.12	1524.68	1.99
2+500	1527.45	1523.90	2.01
2+520	1526.87	1523.06	2.11
2+540	1526.09	1522.22	1.99
2+560	1525.08	1521.38	1.99
2+580	1523.81	1520.54	1.99
2+600	1522.65	1519.71	2.04
2+620	1521.66	1518.87	2.13
2+640	1520.33	1517.96	2.08
2+660	1519.17	1517.03	2.14
2+680	1518.34	1516.15	2.19
2+700	1517.58	1515.50	2.09
2+720	1516.88	1514.84	2.04
2+740	1516.25	1514.19	2.06
2+760	1515.58	1513.53	2.05
2+780	1514.94	1512.87	2.06
2+800	1514.44	1512.24	2.21
2+820	1514.05	1511.90	2.15
2+840	1514.05	1511.57	2.08
2+860	1514.11	1511.23	2.08
2+880	1513.77	1510.90	2.06
2+900	1513.44	1510.56	1.99
2+920	1512.84	1510.23	1.94
2+940	1513.13	1510.24	1.95
2+960	1513.11	1510.29	1.88
2+980	1513.10	1510.33	1.94
3+000	1513.09	1510.89	1.95

PIPE DETAILS: ON.560mm HDPE PN

FITTINGS: WO

HYDRAULIC GRADIENT (%)

CROSSINGS: ROAD CROSSING, ROAD CROSSING, ROAD CROSSING, ROAD CROSSING

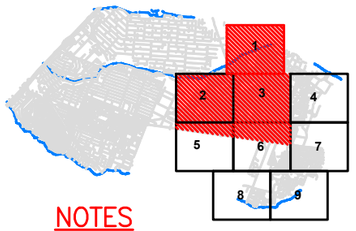

NOTES

1. All levels are in metres above ordinary datum
2. Precise location of air valves, washouts,bends and other fittings to be determined on site
3. Ground and invert level shown are only indicative. Final levels to be confirmed by the Contractor in liaison with the Engineer
4. Pipes are to be laid to even gradients with a minimum cover of 0.6m (Fields), 0.9m (Wayleaves), 1.5m (Under Roads)
5. All bends are horizontal unless otherwise Stated

LEGEND:

- OD63
- OD90
- OD110
- OD160
- OD225
- OD355
- DN400
- OD560
- OD 630
- NODE LABLE
- PRESSURE REDUCING VALVE
- DN – NOMINAL DIAMETER (STEEL)
- OD – OUTSIDE DIAMETER (HDPE)
- DISTRICT METERED AREA (DMA)
- FLOW METER
- BURIED VALVES

N

40 0 40 80 120M

REVISIONS

REV.No.	DATE	DESCRIPTION

Client

ATHI WATER WORKS DEVELOPMENT AGENCY

Project

NAIROBI SATELLITE TOWNS WATER & SANITATION DEV. PROGRAMME
MWIHOKO WATER SUPPLY PROJECT

CONSULTANTS

Posch+Partners consulting engineers in Association with Norken International Ltd

Drawing Title

KAHAWA SUKARI - MWIHOKO A RINGMAIN
LONGITUDINAL PROFILE
1+400 - 2+800

CHIEF ENGINEER: AG	Designed by EK
	Checked by JWK
Scale 1:2000	Date: MARCH 2023
Job No. P1596	

DRAWING No. MW04/RM/KSM/04

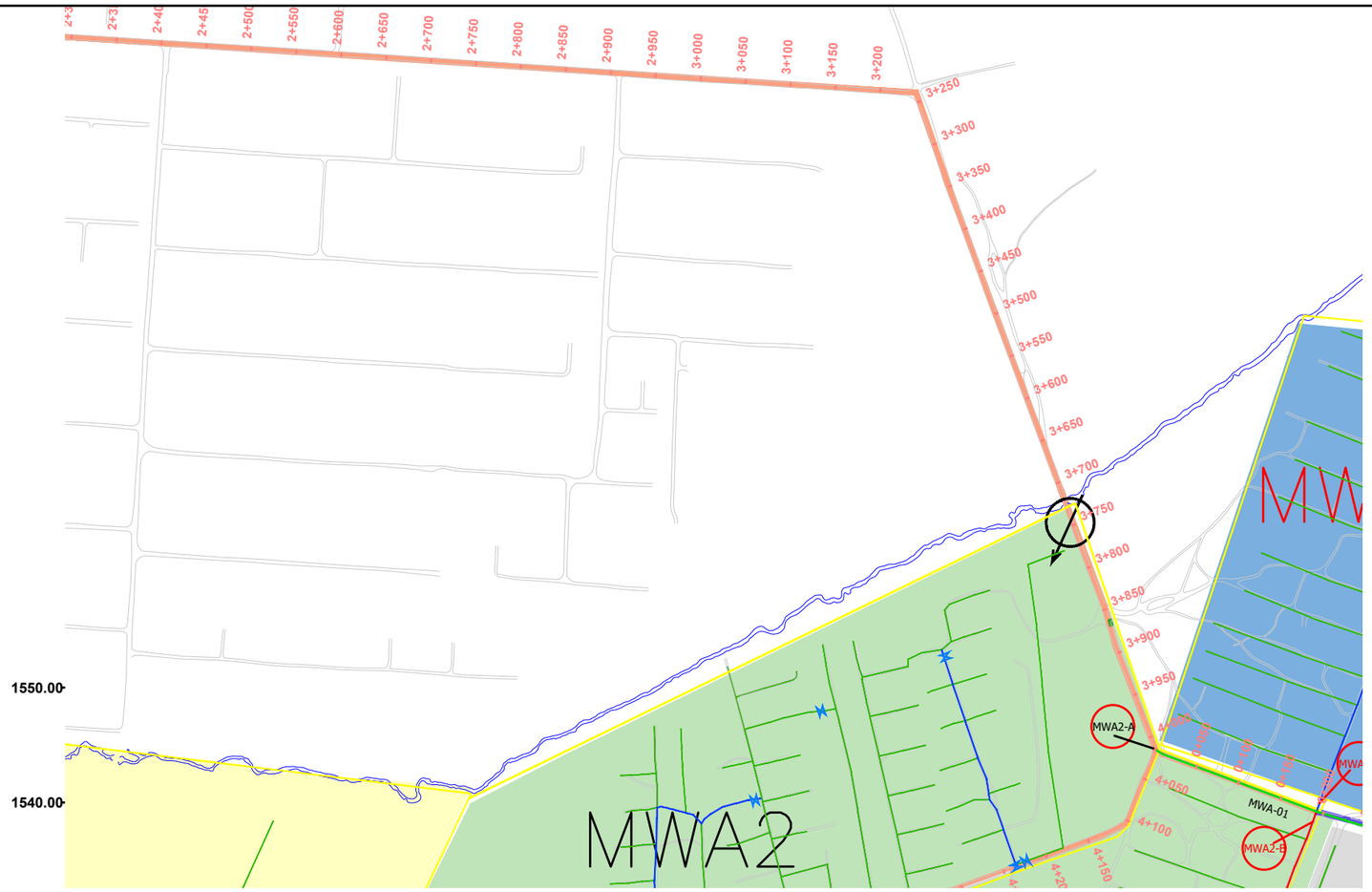

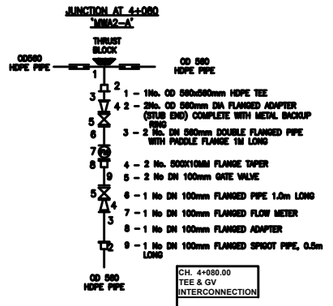

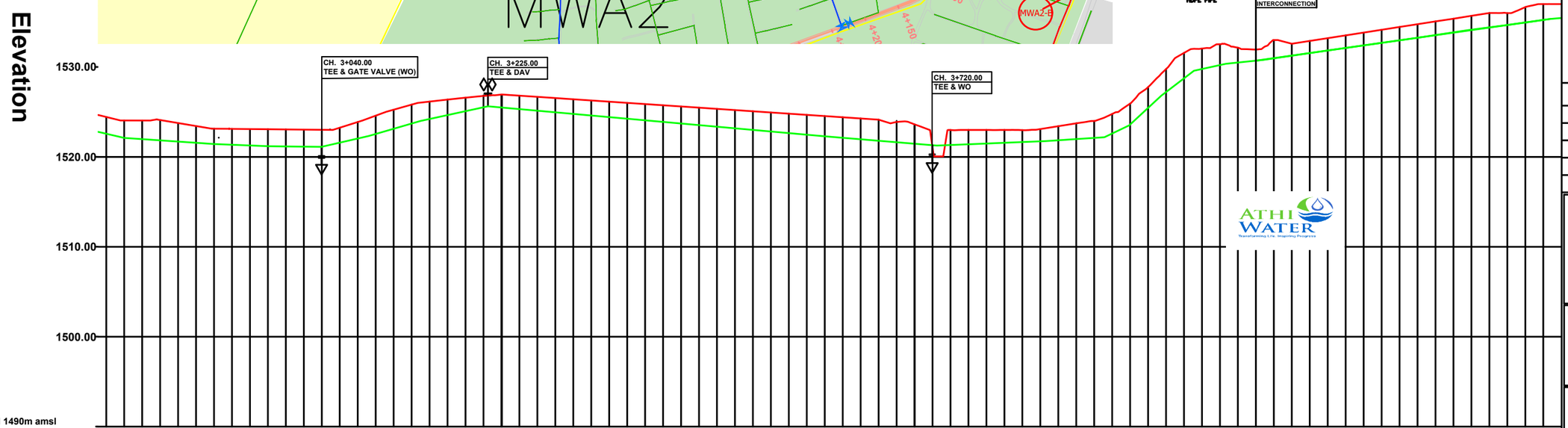

DATUM 1490m amsl

CHAINAGE (m)	GROUND LEVEL (m amsl)	INVERT LEVEL (m amsl)	TRENCH DEPTH (m)
2+800	1514.44	1512.24	2.21
2+820	1514.05	1511.90	2.15
2+840	1514.05	1511.57	2.08
2+860	1514.11	1511.23	2.08
2+880	1513.77	1510.90	2.06
2+900	1513.44	1510.56	1.99
2+920	1512.84	1510.23	1.94
2+940	1513.13	1510.24	1.95
2+960	1513.11	1510.29	1.88
2+980	1513.10	1510.33	1.94
3+000	1513.09	1510.59	1.95
3+020	1513.08	1510.85	1.88
3+040	1513.07	1511.13	1.94
3+060	1513.35	1511.58	1.77
3+080	1513.90	1512.04	1.86
3+100	1514.59	1512.55	2.04
3+120	1515.25	1513.13	2.12
3+140	1515.82	1513.71	2.11
3+160	1516.16	1514.22	1.94
3+180	1516.38	1514.65	1.73
3+200	1516.59	1515.09	1.50
3+220	1516.79	1515.52	1.27
3+240	1516.94	1515.15	1.78
3+260	1516.29	1514.52	1.78
3+280	1515.46	1513.88	1.58
3+300	1514.71	1513.12	1.59
3+320	1513.81	1512.27	1.54
3+340	1512.77	1511.26	1.51
3+360	1511.56	1510.40	1.15
3+380	1511.16	1509.96	1.20
3+400	1511.85	1509.85	2.00
3+420	1512.00	1509.74	2.26
3+440	1511.41	1509.63	1.77
3+460	1511.99	1509.56	2.44
3+480	1511.99	1509.49	2.50
3+500	1512.00	1509.64	2.36
3+520	1511.99	1509.78	2.21
3+540	1511.99	1509.93	2.07
3+560	1512.00	1510.06	1.94
3+580	1512.17	1510.20	1.98
3+600	1512.50	1510.33	1.88
3+620	1512.81	1510.47	1.93
3+640	1513.08	1510.62	1.98
3+660	1513.38	1510.77	1.99
3+680	1513.89	1510.92	2.01
3+700	1513.62	1511.08	1.87
3+720	1513.00	1511.23	1.77
3+740	1512.99	1511.32	1.67
3+760	1513.00	1511.41	1.59
3+780	1513.00	1511.49	1.51
3+800	1513.00	1511.57	1.43
3+820	1512.98	1511.65	1.33
3+840	1513.10	1511.74	1.36
3+860	1513.42	1511.85	1.56
3+880	1513.74	1511.98	1.75
3+900	1514.00	1512.12	1.88
3+920	1514.78	1512.82	1.96
3+940	1515.93	1514.28	1.65
3+960	1517.76	1515.74	2.02
3+980	1519.77	1517.22	2.55
4+000	1521.57	1518.74	2.83
4+020	1522.05	1519.78	2.27
4+040	1522.54	1520.22	2.32
4+060	1522.15	1520.50	1.65
4+080	1521.95	1520.71	1.24
4+100	1523.00	1520.61	2.39
4+120	1522.40	1520.30	2.10
4+140	1521.41	1520.00	1.41
4+160	1521.52	1519.66	1.86
4+180	1521.98	1518.90	1.88
4+200	1521.17	1518.13	1.98
4+220	1521.23	1519.39	1.84
4+240	1519.39	1517.62	1.78
4+260	1520.50	1518.31	1.79
4+280	1522.22	1519.52	1.89
4+300	1522.73	1520.74	1.99
4+320	1524.76	1521.93	2.83
4+340	1526.01	1523.04	2.97
4+360	1526.00	1524.08	1.92
4+380	1526.67	1524.61	2.06
4+400	1527.00	1525.14	1.87

PIPE DETAILS: ON.560mm HDPE PN.10

FITTINGS: WO, DAV, WO, JUN, JUN

HYDRAULIC GRADIENT (%)

CROSSINGS: ROAD CROSSING, RIVER PIERS

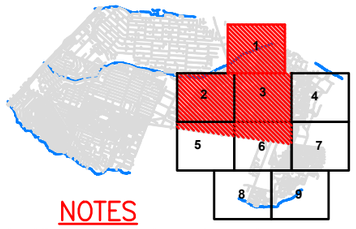

NOTES

1. All levels are in metres above ordinary datum
2. Precise location of air valves, washouts,bends and other fittings to be determined on site
3. Ground and invert level shown are only indicative. Final levels to be confirmed by the Contractor in liaison with the Engineer
4. Pipes are to be laid to even gradients with a minimum cover of 0.6m (Fields), 0.9m (Wayleaves), 1.5m (Under Roads)
5. All bends are horizontal unless otherwise Stated

LEGEND:

- OD63
- OD90
- OD110
- OD160
- OD225
- OD355
- DN400
- OD560
- OD 630
- NODE LABLE
- DN – NOMINAL DIAMETER (STEEL)
- OD – OUTSIDE DIAMETER (HDPE)
- FLOW METER
- BURIED VALVES
- PRESSURE REDUCING VALVE
- DISTRICT METERED AREA (DMA)

N

40 0 40 80 120M

REVISIONS

REV.No.	DATE	DESCRIPTION

Client

ATHI WATER WORKS DEVELOPMENT AGENCY

Project

NAIROBI SATELLITE TOWNS WATER & SANITATION DEV. PROGRAMME
MWIHOKO WATER SUPPLY PROJECT

CONSULTANTS

Posch+Partners consulting engineers

in Association with

Norken International Ltd

Drawing Title

KAHAWA SUKARI - MWIHOKO A
RINGMAIN
LONGITUDINAL PROFILE
2+800 - 4+200

CHIEF ENGINEER: AG	Designed by EK
	Checked by JWK
Scale 1:2000	Date: MARCH 2023
Job No. P1596	

DRAWING No. MW04/RM/KSM/05

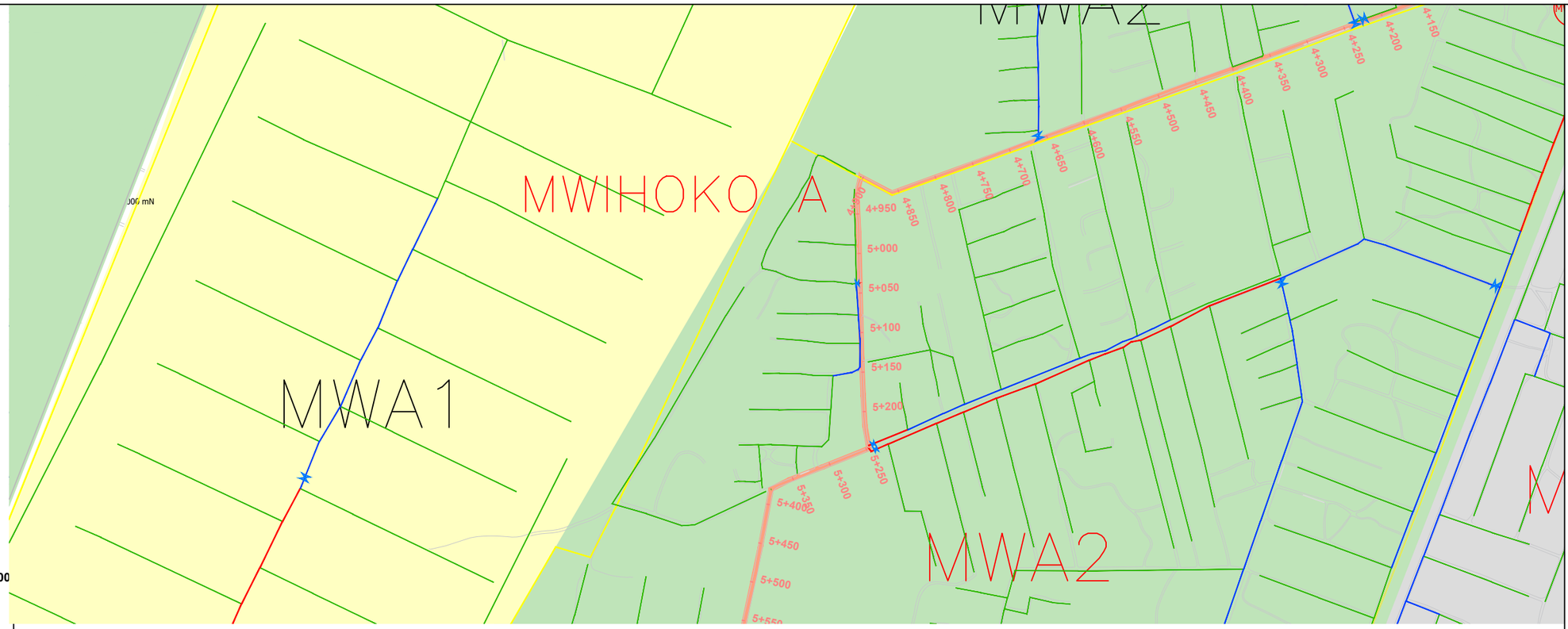

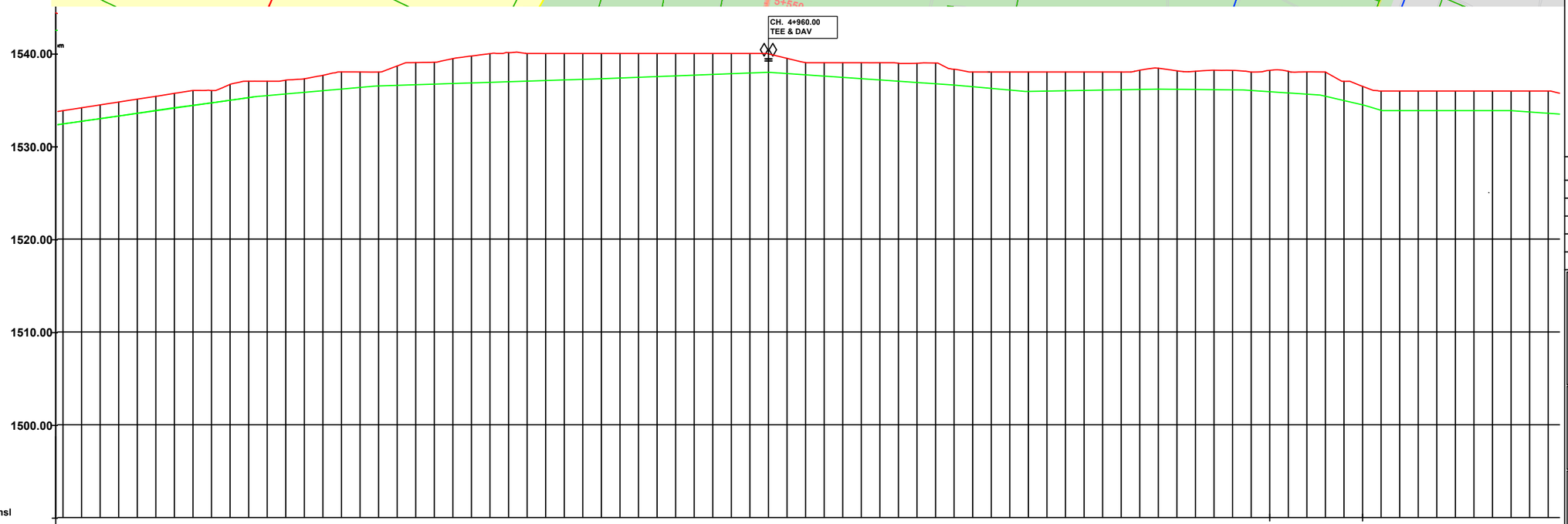

CHAINAGE (m)	GROUND LEVEL (m amsl)	INVERT LEVEL (m amsl)	TRENCH DEPTH (m)
4+200	1521.17	1518.13	1.98
4+220	1518.23	1517.39	1.84
4+240	1519.39	1517.62	1.78
4+260	1520.50	1518.31	1.79
4+280	1522.22	1519.52	1.89
4+300	1522.73	1520.74	1.99
4+320	1524.76	1521.93	2.83
4+340	1526.01	1523.04	2.97
4+360	1526.00	1524.08	1.92
4+380	1526.67	1524.61	2.06
4+400	1527.00	1525.14	1.87
4+420	1527.01	1525.46	1.55
4+440	1527.12	1525.63	1.49
4+460	1527.27	1525.81	1.46
4+480	1527.64	1525.98	1.66
4+500	1528.01	1526.16	1.85
4+520	1528.00	1526.34	1.67
4+540	1528.00	1526.50	1.50
4+560	1528.65	1526.56	2.09
4+580	1529.01	1526.63	2.39
4+600	1529.06	1526.69	2.36
4+620	1529.44	1526.76	2.42
4+640	1529.72	1526.82	2.38
4+660	1529.98	1526.89	2.50
4+680	1530.09	1526.95	2.62
4+700	1530.00	1527.02	2.62
4+720	1530.00	1527.08	2.58
4+740	1530.00	1527.15	2.48
4+760	1530.00	1527.21	2.68
4+780	1530.00	1527.27	2.48
4+800	1530.00	1527.34	2.66
4+820	1530.00	1527.41	2.59
4+840	1530.00	1527.48	2.52
4+860	1530.00	1527.55	2.45
4+880	1530.00	1527.62	2.38
4+900	1530.00	1527.68	2.32
4+920	1530.00	1527.75	2.25
4+940	1530.00	1527.82	2.18
4+960	1529.95	1527.89	2.07
4+980	1529.47	1527.83	1.64
5+000	1529.00	1527.69	1.31
5+020	1529.00	1527.56	1.44
5+040	1529.00	1527.42	1.58
5+060	1529.00	1527.28	1.72
5+080	1529.00	1527.14	1.86
5+100	1528.94	1527.00	1.94
5+120	1528.93	1526.87	2.07
5+140	1528.96	1526.73	2.23
5+160	1528.29	1526.59	1.70
5+180	1528.00	1526.41	1.59
5+200	1528.00	1526.23	1.77
5+220	1528.00	1526.05	1.95
5+240	1528.00	1525.91	2.09
5+260	1528.00	1525.94	2.06
5+280	1528.00	1525.98	2.02
5+300	1528.00	1526.01	1.99
5+320	1528.00	1526.05	1.95
5+340	1528.00	1526.09	1.91
5+360	1528.19	1526.12	2.07
5+380	1528.41	1526.16	2.25
5+400	1528.13	1526.14	1.99
5+420	1528.08	1526.12	1.96
5+440	1528.19	1526.10	2.09
5+460	1528.17	1526.08	2.10
5+480	1528.00	1526.01	1.99
5+500	1528.17	1525.88	2.30
5+520	1528.08	1525.74	2.34
5+540	1528.01	1525.61	2.40
5+560	1528.00	1525.39	2.61
5+580	1526.99	1524.92	2.07
5+600	1526.45	1524.46	2.00
5+620	1525.59	1523.38	2.22
5+640	1524.64	1522.24	2.40
5+660	1523.34	1520.27	3.07
5+680	1520.79	1518.09	2.70
5+700	1518.33	1515.88	2.45
5+720	1516.20	1513.98	2.22
5+740	1514.76	1512.76	2.00
5+760	1513.74	1511.53	2.21
5+780	1513.05	1510.87	2.18
5+800	1512.33	1510.37	1.96

PIPE DETAILS

FITTINGS: JUN, JUN, DAV, JUN, JUN

HYDRAULIC GRADIENT (%)

CROSSINGS

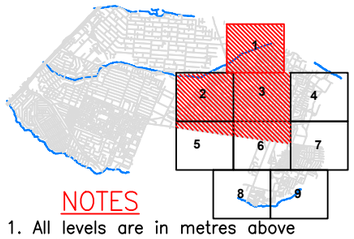

NOTES

1. All levels are in metres above ordinary datum
2. Precise location of air valves, washouts,bends and other fittings to be determined on site
3. Ground and invert level shown are only indicative. Final levels to be confirmed by the Contractor in liaison with the Engineer
4. Pipes are to be laid to even gradients with a minimum cover of 0.6m (Fields), 0.9m (Wayleaves), 1.5m (Under Roads)
5. All bends are horizontal unless otherwise Stated

LEGEND:

- OD63
- OD90
- OD110
- OD160
- OD225
- OD355
- DN400
- OD560
- OD 630
- NODE LABLE
- DN – NOMINAL DIAMETER (STEEL)
- OD – OUTSIDE DIAMETER (HDPE)
- FLOW METER
- BURIED VALVES
- PRESSURE REDUCING VALVE
- DISTRICT METERED AREA (DMA)

N

40 0 40 80 120M

REVISIONS

REV.No.	DATE	DESCRIPTION

Client

ATHI WATER WORKS DEVELOPMENT AGENCY

Project

NAIROBI SATELLITE TOWNS WATER & SANITATION DEV. PROGRAMME
MWIHOKO WATER SUPPLY PROJECT

CONSULTANTS

Posch+Partners consulting engineers in Association with Norken International Ltd

Drawing Title

KAHAWA SUKARI - MWIHOKO A
RINGMAIN
LONGITUDINAL PROFILE
4+200 - 5+800

CHIEF ENGINEER: AG	Designed by EK
	Checked by JWK
Scale 1:2000	Date: MARCH 2023
Job No. P1596	

DRAWING No. MW04/RM/KSM/06

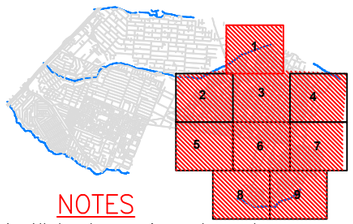

NOTES

1. All levels are in metres above ordinary datum
2. Precise location of air valves, washouts,bends and other fittings to be determined on site
3. Ground and invert level shown are only indicative. Final levels to be confirmed by the Contractor in liaison with the Engineer
4. Pipes are to be laid to even gradients with a minimum cover of 0.6m (Fields), 0.9m (Wayleaves), 1.5m (Under Roads)
5. All bends are horizontal unless otherwise Stated

LEGEND:

- OD63
- OD90
- OD110
- OD160
- OD225
- NODE LABLE
- DN – NOMINAL DIAMETER (STEEL)
- OD – OUTSIDE DIAMETER (HDPE)
- FLOW METER
- BURIED VALVES
- OD355
- DN400
- OD560
- OD 630
- PRESSURE REDUCING VALVE
- DISTRICT METERED AREA (DMA)

N

40 0 40 80 120M

Elevation

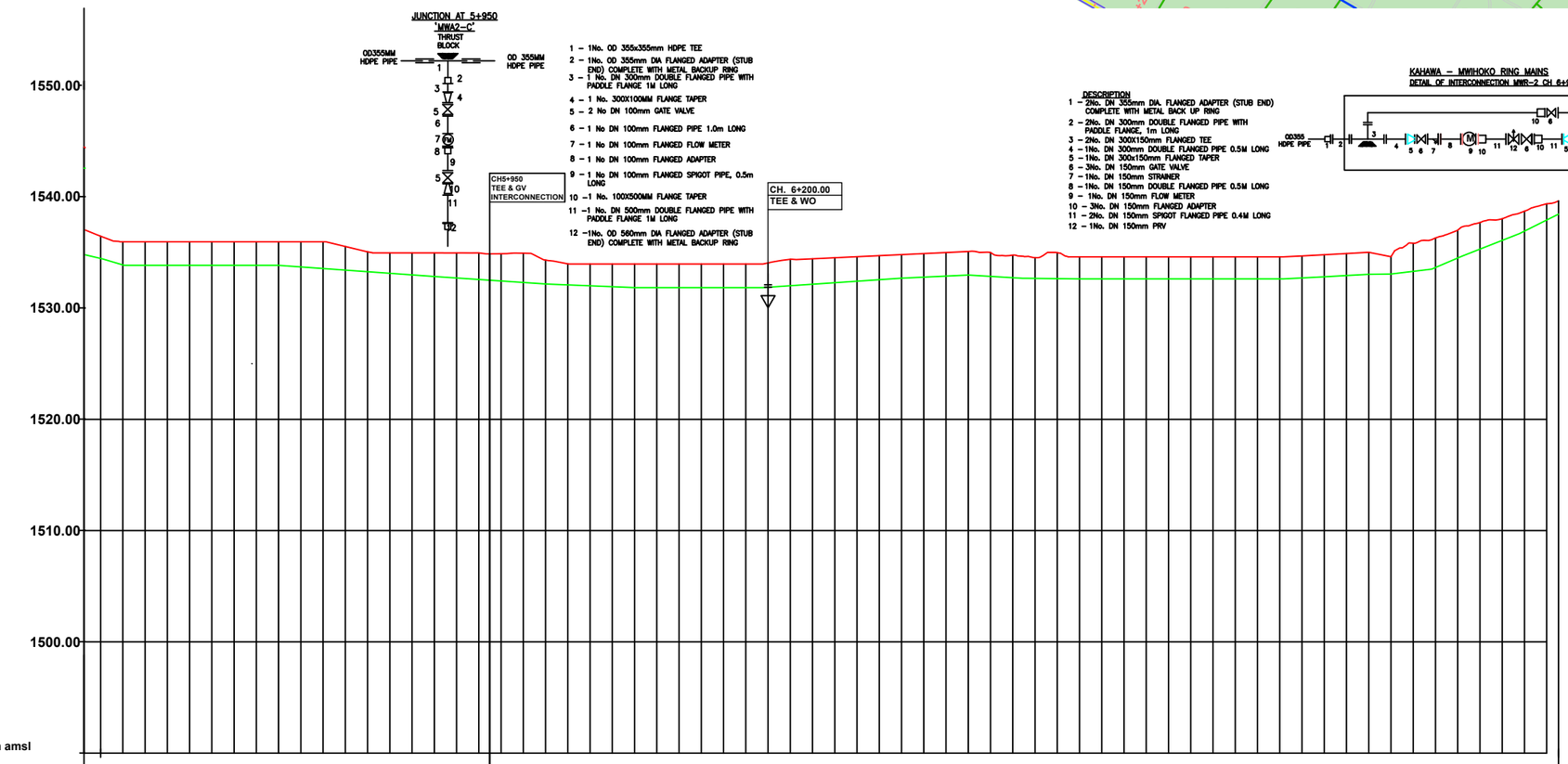

1 – 1No. OD 355x355mm HDPE TEE
2 – 1No. OD 355mm DIA FLANGED ADAPTER (STUB END) COMPLETE WITH METAL BACKUP RING
3 – 1 No. DN 300mm DOUBLE FLANGED PIPE WITH PADDLE FLANGE 1M LONG
4 – 1 No. 300X100MM FLANGE TAPER
5 – 2 No DN 100mm GATE VALVE
6 – 1 No DN 100mm FLANGED PIPE 1.0m LONG
7 – 1 No DN 100mm FLANGED FLOW METER
8 – 1 No DN 100mm FLANGED ADAPTER
9 – 1 No DN 100mm FLANGED SPIGOT PIPE, 0.5m LONG
10 –1 No. 100X500MM FLANGE TAPER
11 –1 No. DN 500mm DOUBLE FLANGED PIPE WITH PADDLE FLANGE 1M LONG
12 –1No. OD 560mm DIA FLANGED ADAPTER (STUB END) COMPLETE WITH METAL BACKUP RING

KAHAWA – MWIHOKO RING MAINS
DETAIL OF INTERCONNECTION MWR–2 CH 6+923

DESCRIPTION
1 – 2No. DN 355mm DIA. FLANGED ADAPTER (STUB END) COMPLETE WITH METAL BACK UP RING
2 – 2No. DN 300mm DOUBLE FLANGED PIPE WITH PADDLE FLANGE, 1m LONG
3 – 2No. DN 300X150mm FLANGED TEE
4 – 1No. DN 300mm DOUBLE FLANGED PIPE 0.5M LONG
5 – 1No. DN 300x150mm FLANGED TAPER
6 – 3No. DN 150mm GATE VALVE
7 – 1No. DN 150mm STRAINER
8 – 1No. DN 150mm DOUBLE FLANGED PIPE 0.5M LONG
9 – 1No. DN 150mm FLOW METER
10 – 3No. DN 150mm FLANGED ADAPTER
11 – 2No. DN 150mm SPIGOT FLANGED PIPE 0.4M LONG
12 – 1No. DN 150mm PRV

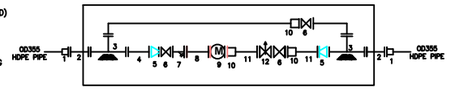

CHAINAGE (m)	GROUND LEVEL (m amsl)	INVERT LEVEL (m amsl)	TRENCH DEPTH (m)
3+600	1526.45	1524.46	2.00
3+620	1525.59	1523.38	2.22
3+640	1524.64	1522.24	2.40
3+660	1523.34	1520.27	3.07
3+680	1520.79	1518.09	2.70
3+700	1518.33	1515.88	2.45
3+720	1516.20	1513.98	2.22
3+740	1514.76	1512.76	2.00
3+760	1513.74	1511.53	2.21
3+780	1513.05	1510.87	2.18
3+800	1512.33	1510.37	1.96
3+820	1512.02	1509.98	2.04
3+840	1511.00	1509.93	1.07
3+860	1511.27	1509.89	1.39
3+880	1511.67	1509.84	1.83
3+900	1511.99	1509.80	2.19
3+920	1512.63	1509.76	2.35
3+940	1514.97	1509.95	2.46
3+960	1515.45	1510.19	2.38
3+980	1514.64	1510.44	2.16
3+000	1513.63	1510.68	2.20
3+020	1512.97	1510.94	2.03
3+040	1513.03	1511.23	1.80
3+060	1513.54	1511.52	2.02
3+080	1513.45	1511.81	1.63
3+100	1513.68	1512.11	1.58
3+120	1514.03	1512.40	1.63
3+140	1514.75	1512.69	2.06
3+160	1515.14	1512.98	2.16
3+180	1515.14	1513.28	1.87
3+200	1515.91	1513.66	2.25
3+220	1516.00	1514.34	1.66
3+240	1517.14	1515.02	2.11
3+260	1517.84	1515.70	2.14
3+280	1518.99	1516.67	2.32
3+300	1520.69	1517.87	2.42
3+320	1522.27	1519.06	2.33
3+340	1523.42	1519.99	2.48
3+360	1524.21	1520.70	2.54
3+380	1525.08	1521.26	2.53
3+400	1524.99	1521.61	2.33
3+420	1524.75	1521.68	2.16
3+440	1524.53	1521.43	2.16
3+460	1524.97	1521.20	2.14
3+480	1523.74	1520.86	2.14
3+500	1521.36	1520.31	1.72
3+520	1520.77	1519.75	1.88
3+540	1521.56	1519.48	2.08
3+560	1520.60	1519.25	1.36
3+580	1521.28	1519.02	2.27
3+600	1521.42	1518.79	2.63
3+620	1520.68	1518.59	2.08
3+640	1520.00	1518.39	1.61
3+660	1520.00	1518.41	1.58
3+680	1520.12	1518.82	1.30
3+700	1520.95	1519.22	1.73
3+720	1522.15	1519.95	2.20
3+740	1523.66	1520.87	2.16
3+760	1524.61	1521.78	1.99
3+780	1525.83	1522.70	1.89
3+800	1526.30	1523.59	1.79
3+820	1526.99	1524.49	1.97
3+840	1527.68	1525.29	1.97
3+860	1528.02	1526.08	1.95
3+880	1528.70	1526.91	1.79
3+900	1529.36	1527.91	1.46

PIPE DETAILS: OD 355mm HDPE PN.10

FITTINGS: JUN (3+940); JUN (3+640)

HYDRAULIC GRADIENT (%)

CROSSINGS

REVISIONS

REV.No.	DATE	DESCRIPTION

Client

ATHI WATER WORKS DEVELOPMENT AGENCY

Project

NAIROBI SATELLITE TOWNS WATER & SANITATION DEV. PROGRAMME
MWIHOKO WATER SUPPLY PROJECT

CONSULTANTS

Posch+Partners consulting engineers — in Association with — Norken International Ltd

Drawing Title

KAHAWA SUKARI - MWIHOKO A RINGMAIN
LONGITUDINAL PROFILE
5+800 - 6+943

CHIEF ENGINEER: AG	Designed by EK
	Checked by JWK
Scale 1:2000	Date: MARCH 2023
Job No. P1596	

DRAWING No. MW04/RM/KSM/07

MWIHOKO A RING MAIN 02

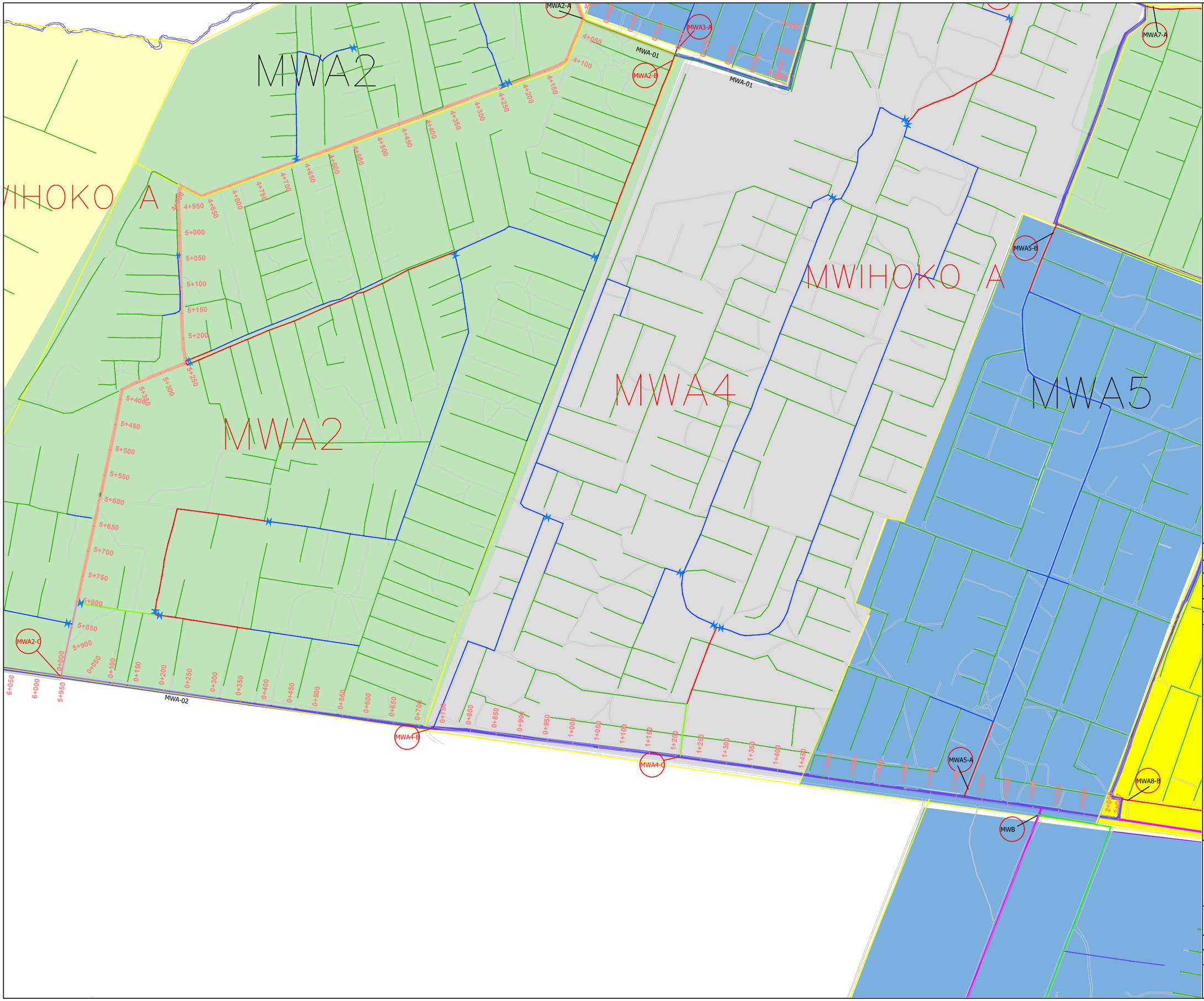

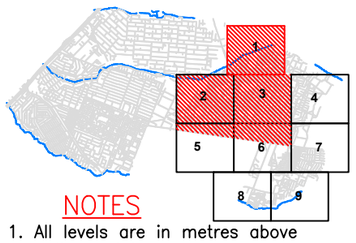

NOTES

1. All levels are in metres above ordinary datum
2. Precise location of air valves, washouts,bends and other fittings to be determined on site
3. Ground and invert level shown are only indicative. Final levels to be confirmed by the Contractor in liaison with the Engineer
4. Pipes are to be laid to even gradients with a minimum cover of 0.6m (Fields), 0.9m (Wayleaves), 1.5m (Under Roads)
5. All bends are horizontal unless otherwise Stated

LEGEND:

- OD63
- OD90
- OD110
- OD160
- OD225
- NODE LABLE
- DN – NOMINAL DIAMETER (STEEL)
- OD – OUTSIDE DIAMETER (HDPE)
- FLOW METER
- BURIED VALVES
- DN400
- OD560
- OD 630
- PRESSURE REDUCING VALVE
- DISTRICT METERED AREA (DMA)

N

40 0 40 80 120M

REVISIONS

REV.No.	DATE	DESCRIPTION

Client

ATHI WATER WORKS DEVELOPMENT AGENCY

Project

NAIROBI SATELLITE TOWNS WATER & SANITATION DEV. PROGRAMME
MWIHOKO WATER SUPPLY PROJECT

CONSULTANTS

Posch+Partners consulting engineers

in Association with

Norken International Ltd

Drawing Title

MWIHOKO A RINGMAIN 02
GENERAL LAYOUT

CHIEF ENGINEER: AG	Designed by EK Checked by JWK
Scale 1:2000	Date: MARCH 2023
Job No. P1596	

DRAWING No. MW04/RM/MWA–02/09

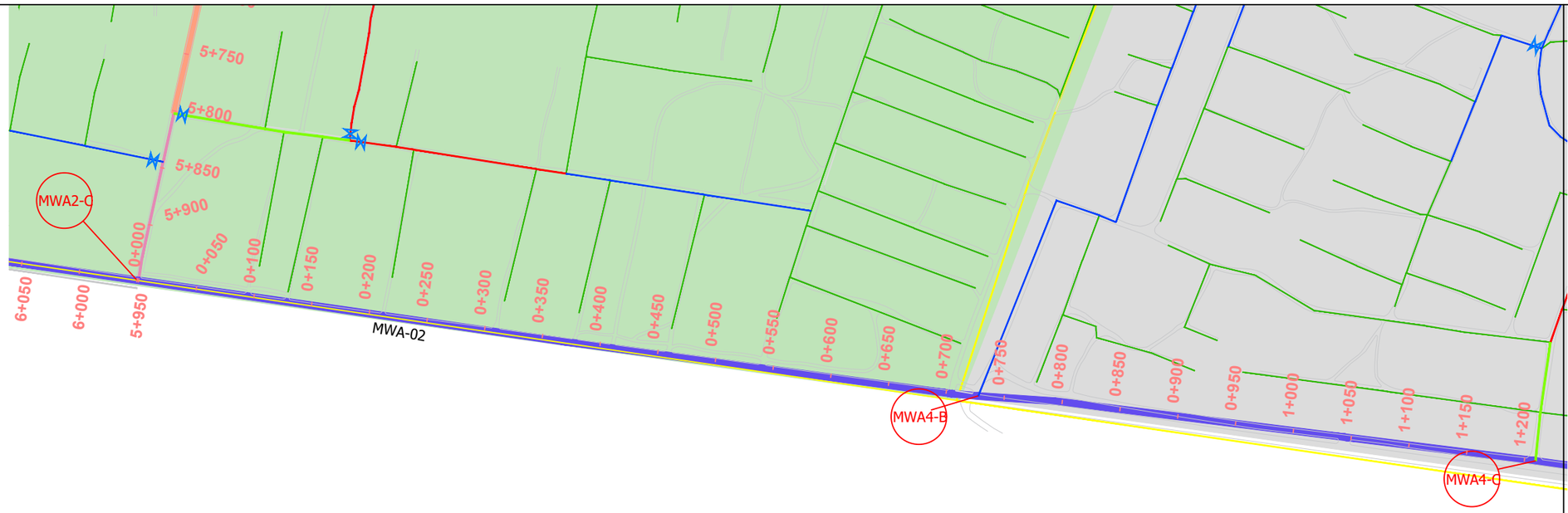

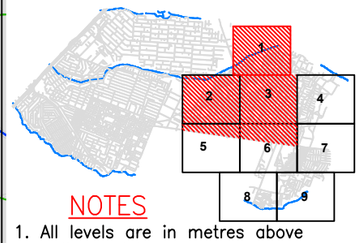

NOTES

1. All levels are in metres above ordinary datum
2. Precise location of air valves, washouts,bends and other fittings to be determined on site
3. Ground and invert level shown are only indicative. Final levels to be confirmed by the Contractor in liaison with the Engineer
4. Pipes are to be laid to even gradients with a minimum cover of 0.6m (Fields), 0.9m (Wayleaves), 1.5m (Under Roads)
5. All bends are horizontal unless otherwise Stated

LEGEND:

- OD63
- OD90
- OD110
- OD160
- OD225
- DN400
- OD560
- OD 630
- NODE LABLE
- DN – NOMINAL DIAMETER (STEEL)
- OD – OUTSIDE DIAMETER (HDPE)
- FLOW METER
- BURIED VALVES
- PRESSURE REDUCING VALVE
- DISTRICT METERED AREA (DMA)

N

40 0 40 80 120M

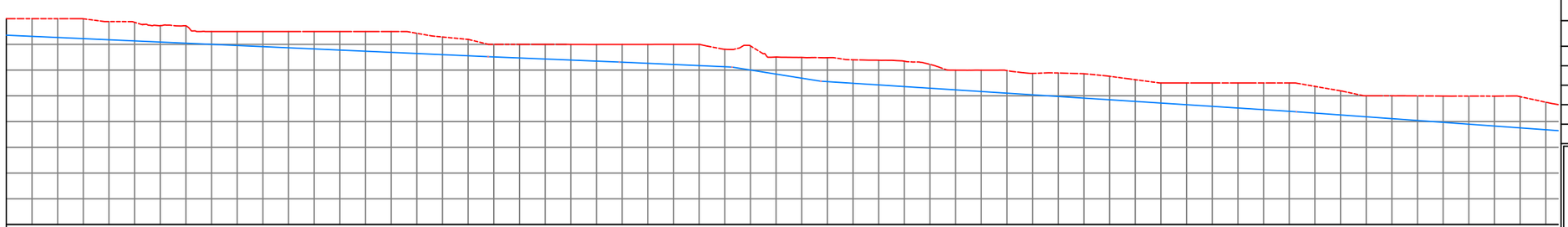

CHAINAGE (m)	GROUND LEVEL (m amsl)	INVERT LEVEL (m amsl)	TRENCH DEPTH (m)
0+000	1526.000	1524.716	1.28
0+020	1526.000	1524.627	1.37
0+040	1526.000	1524.538	1.46
0+060	1525.992	1524.449	1.54
0+080	1525.776	1524.361	1.42
0+100	1525.717	1524.272	1.45
0+120	1525.461	1524.183	1.28
0+140	1525.447	1524.094	1.35
0+160	1525.000	1524.005	0.99
0+180	1525.000	1523.916	1.08
0+200	1525.000	1523.827	1.17
0+220	1525.000	1523.738	1.26
0+240	1525.000	1523.650	1.35
0+260	1525.000	1523.561	1.44
0+280	1525.000	1523.472	1.53
0+300	1525.000	1523.383	1.62
0+320	1524.863	1523.294	1.57
0+340	1524.576	1523.205	1.37
0+360	1524.389	1523.116	1.27
0+380	1524.001	1523.029	0.97
0+400	1524.000	1522.947	1.05
0+420	1524.000	1522.865	1.14
0+440	1523.998	1522.783	1.22
0+460	1523.993	1522.701	1.29
0+480	1523.998	1522.618	1.38
0+500	1523.999	1522.530	1.47
0+520	1523.999	1522.441	1.56
0+540	1524.000	1522.353	1.65
0+560	1523.623	1522.264	1.36
0+580	1523.885	1522.010	1.88
0+600	1523.018	1521.693	1.33
0+620	1522.987	1521.375	1.61
0+640	1522.966	1521.107	1.86
0+660	1522.799	1520.979	1.82
0+680	1522.769	1520.851	1.92
0+700	1522.693	1520.723	1.97
0+720	1522.445	1520.594	1.85
0+740	1521.995	1520.466	1.53
0+760	1521.993	1520.338	1.66
0+780	1521.963	1520.210	1.75
0+800	1521.747	1520.081	1.67
0+820	1521.776	1519.953	1.82
0+840	1521.719	1519.825	1.89
0+860	1521.520	1519.696	1.82
0+880	1521.256	1519.568	1.69
0+900	1521.001	1519.440	1.56
0+920	1521.000	1519.312	1.69
0+940	1521.000	1519.183	1.82
0+960	1521.000	1519.055	1.94
0+980	1521.000	1518.927	2.07
1+000	1521.000	1518.799	2.20
1+020	1520.737	1518.659	2.08
1+040	1520.388	1518.516	1.87
1+060	1520.000	1518.372	1.63
1+080	1520.000	1518.228	1.77
1+100	1519.995	1518.084	1.91
1+120	1519.982	1517.941	2.04
1+140	1519.980	1517.797	2.18
1+160	1519.978	1517.653	2.32
1+180	1519.937	1517.510	2.43
1+200	1519.505	1517.366	2.14

PIPE DETAILS: OD355mm HDPE PN.10

FITTINGS

SLOPE OF PIPE (H/V): JUN

CROSSINGS: ROAD CROSSING; ROAD CROSSING

REVISIONS

REV.No.	DATE	DESCRIPTION

Client

ATHI WATER WORKS DEVELOPMENT AGENCY

Project

NAIROBI SATELLITE TOWNS WATER & SANITATION DEV. PROGRAMME
MWIHOKO WATER SUPPLY PROJECT

CONSULTANTS

Posch+Partners consulting engineers

in Association with

Norken International Ltd

Drawing Title

MWIHOKO A RINGMAIN
LONGITUDINAL PROFILE
0+000 - 1+200

CHIEF ENGINEER: AG	Designed by EK
	Checked by JWK
Scale 1:2000	Date: MARCH 2023
Job No. P1596	

DRAWING No. MW04/RM/MWA–02/10

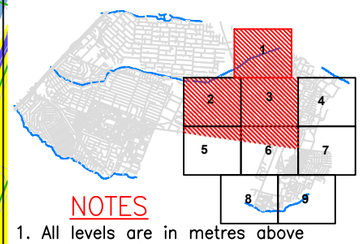

NOTES

1. All levels are in metres above ordinary datum
2. Precise location of air valves, washouts,bends and other fittings to be determined on site
3. Ground and invert level shown are only indicative. Final levels to be confirmed by the Contractor in liaison with the Engineer
4. Pipes are to be laid to even gradients with a minimum cover of 0.6m (Fields), 0.9m (Wayleaves), 1.5m (Under Roads)
5. All bends are horizontal unless otherwise Stated

LEGEND:

- OD63
- OD90
- OD110
- OD160
- OD225
- OD355
- DN400
- OD560
- OD 630
- NODE LABLE
- PRESSURE REDUCING VALVE
- DN – NOMINAL DIAMETER (STEEL)
- OD – OUTSIDE DIAMETER (HDPE)
- DISTRICT METERED AREA (DMA)
- FLOW METER
- BURIED VALVES

N

40 0 40 80 120M

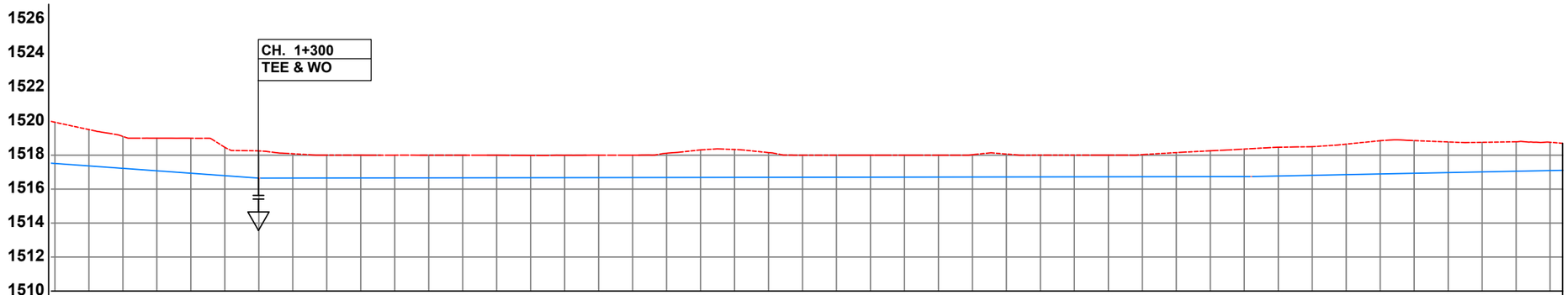

CHAINAGE (m)	GROUND LEVEL (m amsl)	INVERT LEVEL (m amsl)	TRENCH DEPTH (m)
1+180	1519.937	1517.510	2.43
1+200	1519.505	1517.366	2.14
1+220	1519.103	1517.222	1.88
1+240	1519.002	1517.079	1.92
1+260	1518.998	1516.935	2.06
1+280	1518.461	1516.791	1.67
1+300	1518.250	1516.648	1.60
1+320	1518.082	1516.650	1.43
1+340	1518.001	1516.653	1.35
1+360	1518.001	1516.656	1.34
1+380	1518.000	1516.659	1.34
1+400	1518.000	1516.662	1.34
1+420	1518.000	1516.665	1.33
1+440	1517.999	1516.669	1.33
1+460	1517.983	1516.672	1.31
1+480	1517.992	1516.675	1.32
1+500	1518.001	1516.678	1.32
1+520	1518.000	1516.681	1.32
1+540	1518.113	1516.684	1.43
1+560	1518.310	1516.688	1.62
1+580	1518.333	1516.691	1.64
1+600	1518.150	1516.694	1.46
1+620	1518.000	1516.697	1.30
1+640	1518.000	1516.700	1.30
1+660	1518.000	1516.704	1.30
1+680	1518.000	1516.707	1.29
1+700	1518.000	1516.710	1.29
1+720	1518.026	1516.713	1.31
1+740	1518.063	1516.716	1.35
1+760	1518.001	1516.719	1.28
1+780	1518.001	1516.723	1.28
1+800	1518.001	1516.726	1.28
1+820	1518.030	1516.729	1.30
1+840	1518.150	1516.732	1.42
1+860	1518.256	1516.735	1.52
1+880	1518.359	1516.739	1.62
1+900	1518.466	1516.771	1.69
1+920	1518.498	1516.812	1.69
1+940	1518.648	1516.852	1.80
1+960	1518.852	1516.892	1.96
1+980	1518.852	1516.933	1.92
2+000	1518.778	1516.973	1.80
2+020	1518.755	1517.013	1.74
2+040	1518.788	1517.054	1.73
2+060	1518.758	1517.094	1.66

PIPE DETAILS

FITTINGS

SLOPE OF PIPE (H/V): JUN, WO

CROSSINGS: ROAD CROSSING

REVISIONS

REV.No.	DATE	DESCRIPTION

Client

ATHI WATER WORKS DEVELOPMENT AGENCY

Project

NAIROBI SATELLITE TOWNS WATER & SANITATION DEV. PROGRAMME
MWIHOKO WATER SUPPLY PROJECT

CONSULTANTS

Posch+Partners consulting engineers in Association with Norken International Ltd

Drawing Title

MWIHOKO A RINGMAIN
LONGITUDINAL PROFILE
1+200 - 2+067

CHIEF ENGINEER: AG	Designed by EK
	Checked by JWK
Scale 1:2000	Date: MARCH 2023
Job No. P1596	

DRAWING No. MW04/RM/MWA–02/11

DISTRIBUTION NETWORK

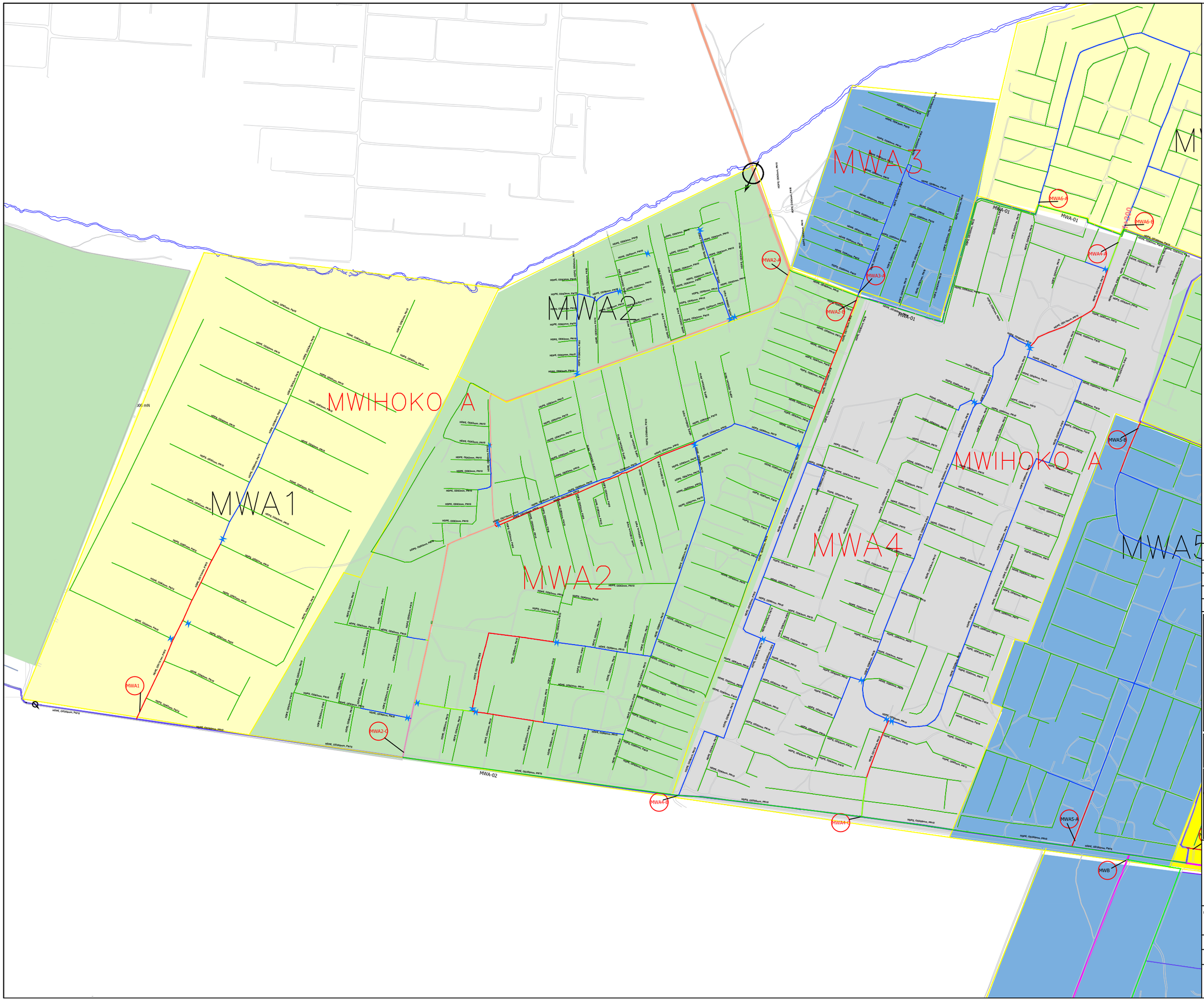

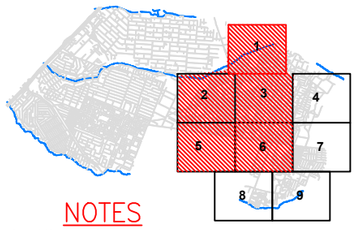

NOTES

1. All levels are in metres above ordinary datum
2. Precise location of air valves, washouts,bends and other fittings to be determined on site
3. Ground and invert level shown are only indicative. Final levels to be confirmed by the Contractor in liaison with the Engineer
4. Pipes are to be laid to even gradients with a minimum cover of 0.6m (Fields), 0.9m (Wayleaves), 1.5m (Under Roads)
5. All bends are horizontal unless otherwise Stated

LEGEND:

- OD63
- OD90
- OD110
- OD160
- OD225
- NODE LABLE
- DN – NOMINAL DIAMETER (STEEL)
- OD – OUTSIDE DIAMETER (HDPE)
- FLOW METER
- BURIED VALVES
- OD355
- DN400
- OD560
- OD 630
- PRESSURE REDUCING VALVE
- DISTRICT METERED AREA (DMA)

N

40 0 40 80 120M

REVISIONS

REV.No.	DATE	DESCRIPTION

Client

ATHI WATER WORKS DEVELOPMENT AGENCY

Project

NAIROBI SATELLITE TOWNS WATER & SANITATION DEV. PROGRAMME

MWIHOKO WATER SUPPLY PROJECT

CONSULTANTS

Pasch+Partners consulting engineers in Association with Norken International Ltd

Drawing Title

MWIHOKO DISTRIBUTION SYSTEM
GENERAL LAYOUT
DMA 1 - 4

CHIEF ENGINEER: AG		Designed by	EK
		Checked by	JWK
Scale 1:2000		Date: MARCH 2023	
Job No.	P1596		

DRAWING No. MW04/DNS/12

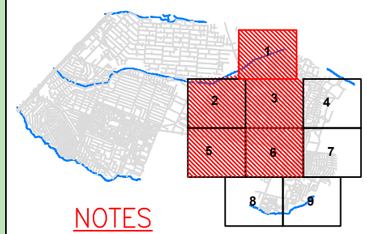

NOTES

1. All levels are in metres above ordinary datum
2. Precise location of air valves, washouts,bends and other fittings to be determined on site
3. Ground and invert level shown are only indicative. Final levels to be confirmed by the Contractor in liaison with the Engineer
4. Pipes are to be laid to even gradients with a minimum cover of 0.6m (Fields), 0.9m (Wayleaves), 1.5m (Under Roads)
5. All bends are horizontal unless otherwise Stated

LEGEND:

- OD63
- OD90
- OD110
- OD160
- OD225
- OD355
- DN400
- OD560
- OD 630
- NODE LABLE
- DN – NOMINAL DIAMETER (STEEL)
- OD – OUTSIDE DIAMETER (HDPE)
- FLOW METER
- BURIED VALVES
- PRESSURE REDUCING VALVE
- DISTRICT METERED AREA (DMA)

N

40 0 40 80 120M

REVISIONS

REV.No.	DATE	DESCRIPTION

Client

ATHI WATER WORKS
Accelerating Access to Water and Sanitation

ATHI WATER WORKS DEVELOPMENT AGENCY

Project

NAIROBI SATELLITE TOWNS WATER & SANITATION DEV. PROGRAMME
MWIHOKO WATER SUPPLY PROJECT

CONSULTANTS

Posch+Partners consulting engineers *in Association with* Nerken International Ltd

Drawing Title

MWIHOKO DISTRIBUTION SYSTEM
DISTRICT METERED AREA (DMA)
MWA-1

CHIEF ENGINEER: AG	Designed by EK
	Checked by JWK
Scale 1:2000	Date: MARCH 2023
Job No. P1596	

DRAWING No. MW04/DNS/13

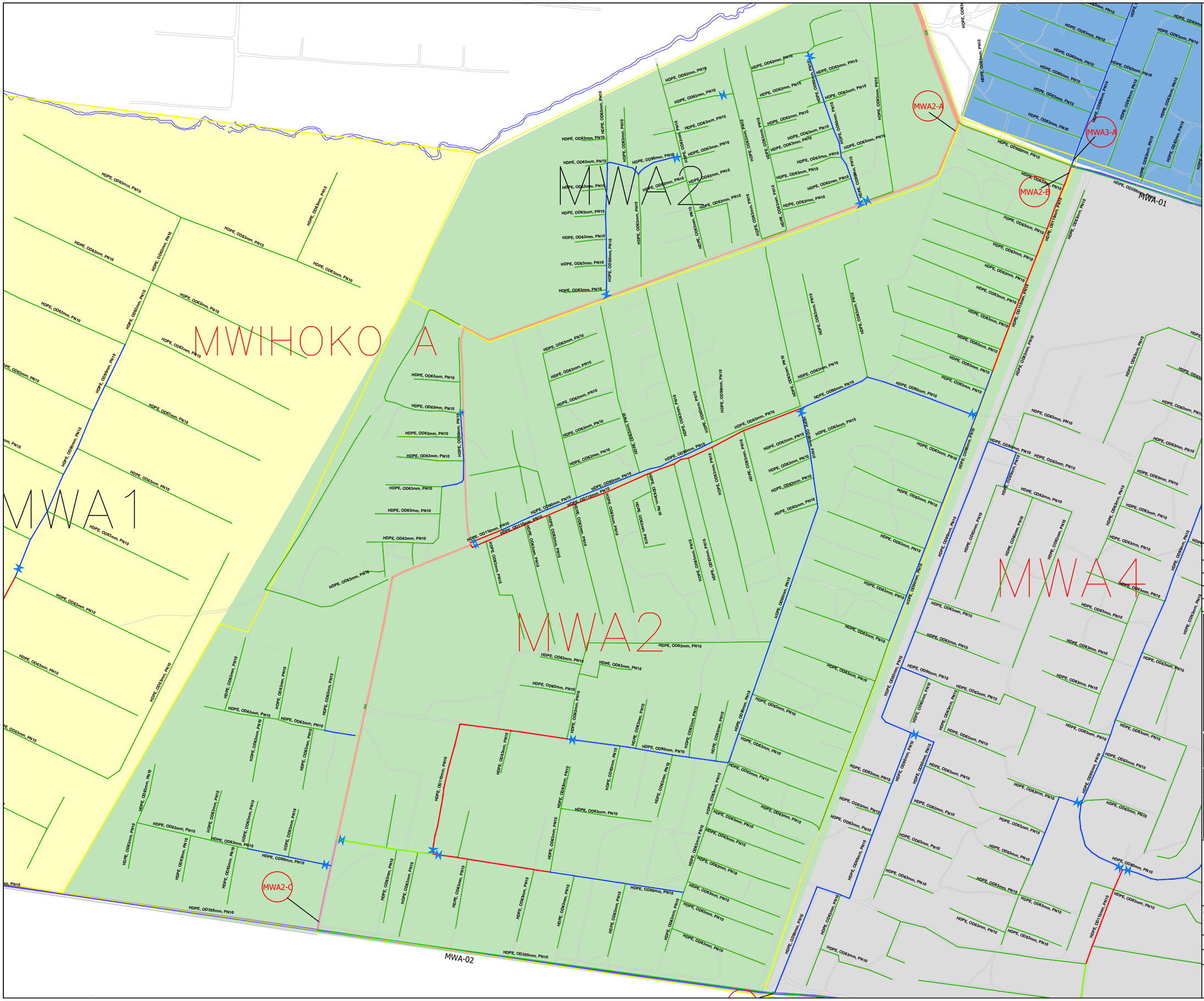

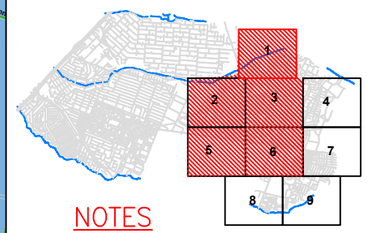

NOTES

1. All levels are in metres above ordinary datum
2. Precise location of air valves, washouts,bends and other fittings to be determined on site
3. Ground and invert level shown are only indicative. Final levels to be confirmed by the Contractor in liaison with the Engineer
4. Pipes are to be laid to even gradients with a minimum cover of 0.6m (Fields), 0.9m (Wayleaves), 1.5m (Under Roads)
5. All bends are horizontal unless otherwise Stated

LEGEND:

- OD63
- OD90
- OD110
- OD160
- OD225
- OD355
- DN400
- OD560
- OD 630
- NODE LABLE
- DN – NOMINAL DIAMETER (STEEL)
- OD – OUTSIDE DIAMETER (HDPE)
- FLOW METER
- BURIED VALVES
- PRESSURE REDUCING VALVE
- DISTRICT METERED AREA (DMA)

N

40 0 40 80 120M

REVISIONS

REV.No.	DATE	DESCRIPTION

Client

ATHI WATER WORKS
Accelerating Access to Water and Sanitation
ATHI WATER WORKS DEVELOPMENT AGENCY

Project

NAIROBI SATELLITE TOWNS WATER & SANITATION DEV. PROGRAMME
MWIHOKO WATER SUPPLY PROJECT

CONSULTANTS

Posch+Partners consulting engineers in Association with Norken International Ltd

Drawing Title

MWIHOKO DISTRIBUTION SYSTEM
DISTRICT METERED AREA (DMA)
MWA-02

CHIEF ENGINEER: AG		Designed by	EK
		Checked by	JWK
Scale 1:2000		Date:	MARCH 2023
Job No.	P1596		

DRAWING No. MW04/DNS/14

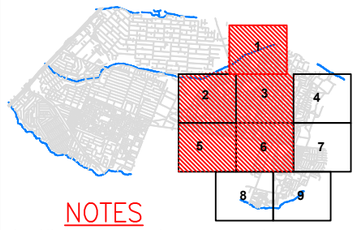

NOTES

1. All levels are in metres above ordinary datum
2. Precise location of air valves, washouts,bends and other fittings to be determined on site
3. Ground and invert level shown are only indicative. Final levels to be confirmed by the Contractor in liaison with the Engineer
4. Pipes are to be laid to even gradients with a minimum cover of 0.6m (Fields), 0.9m (Wayleaves), 1.5m (Under Roads)
5. All bends are horizontal unless otherwise Stated

LEGEND:

- OD63
- OD90
- OD110
- OD160
- OD225
- OD355
- DN400
- OD560
- OD 630
- NODE LABLE
- DN – NOMINAL DIAMETER (STEEL)
- OD – OUTSIDE DIAMETER (HDPE)
- FLOW METER
- BURIED VALVES
- PRESSURE REDUCING VALVE
- DISTRICT METERED AREA (DMA)

N

40 0 40 80 120M

REVISIONS

REV.No.	DATE	DESCRIPTION

Client

ATHI WATER WORKS
Accelerating Access to Water and Sanitation

ATHI WATER WORKS DEVELOPMENT AGENCY

Project

NAIROBI SATELLITE TOWNS WATER & SANITATION DEV. PROGRAMME
MWIHOKO WATER SUPPLY PROJECT

CONSULTANTS

Posch+Partners consulting engineers *in Association with* Norken International Ltd

Drawing Title

MWIHOKO DISTRIBUTION SYSTEM
DISTRICT METERED AREA (DMA)
MWA-3

CHIEF ENGINEER: AG		Designed by	EK
		Checked by	JWK
Scale 1:2000		Date: MARCH 2023	
Job No.	P1596		

DRAWING No. MW04/DNS/15

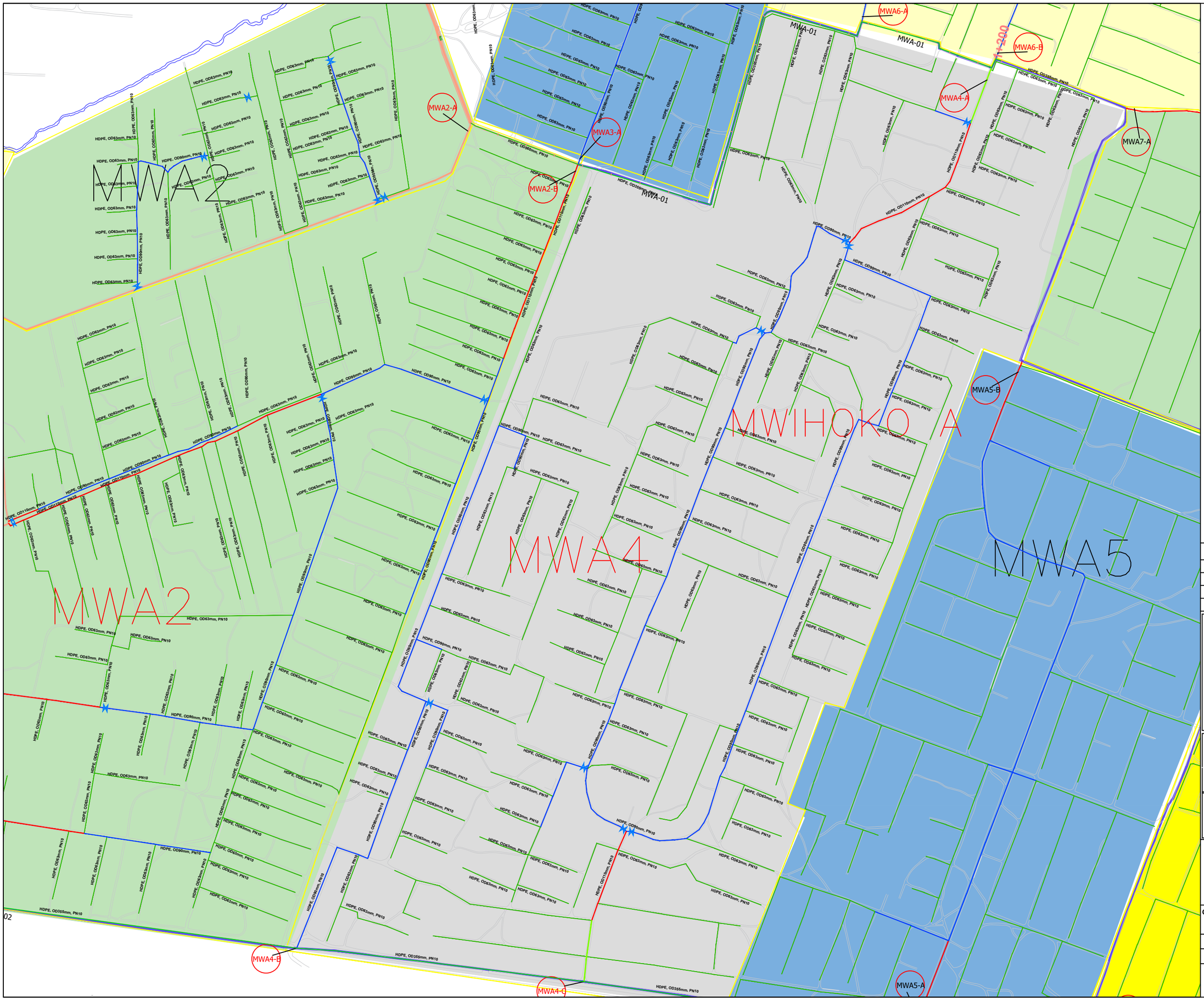

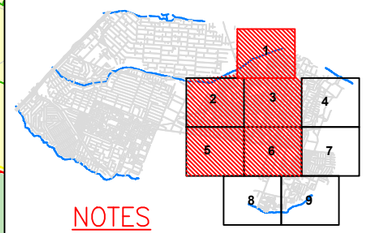

NOTES

1. All levels are in metres above ordinary datum
2. Precise location of air valves, washouts,bends and other fittings to be determined on site
3. Ground and invert level shown are only indicative. Final levels to be confirmed by the Contractor in liaison with the Engineer
4. Pipes are to be laid to even gradients with a minimum cover of 0.6m (Fields), 0.9m (Wayleaves), 1.5m (Under Roads)
5. All bends are horizontal unless otherwise Stated

LEGEND:

- OD63
- OD90
- OD110
- OD160
- OD225
- NODE LABLE
- DN – NOMINAL DIAMETER (STEEL)
- OD – OUTSIDE DIAMETER (HDPE)
- FLOW METER
- BURIED VALVES
- OD355
- DN400
- OD560
- OD 630
- PRESSURE REDUCING VALVE
- DISTRICT METERED AREA (DMA)

N

40 0 40 80 120M

REVISIONS

REV.No.	DATE	DESCRIPTION

Client

ATHI WATER WORKS

Accelerating Access to Water and Sanitation

ATHI WATER WORKS DEVELOPMENT AGENCY

Project

NAIROBI SATELLITE TOWNS WATER & SANITATION DEV. PROGRAMME

MWIHOKO WATER SUPPLY PROJECT

CONSULTANTS

Posch+Partners consulting engineers

in Association with

Norken International Ltd

Drawing Title

MWIHOKO DISTRIBUTION SYSTEM
DISTRICT METERED AREA
MWA-04

CHIEF ENGINEER: AG	Designed by EK
	Checked by JWK
Scale 1:2000	Date: MARCH 2023
Job No. P1596	

DRAWING No. MW04/DNS/16

NODES WITH FLOW METER (FM)

JUNCTION 'MWA-1'

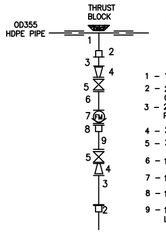

1 – 1No. OD 355x110mm HDPE TEE
2 – 2No. 110mm DIA FLANGED ADAPTER (STUB END) COMPLETE WITH METAL BACKUP RING
3 – 2 No. DN 100mm DOUBLE FLANGED PIPE WITH PADDLE FLANGE 1M LONG
4 – 2 No. 100X50MM FLANGE TAPER
5 – 2 No DN 50mm GATE VALVE
6 – 1 No DN 50mm FLANGED PIPE 0.4m LONG
7 – 1 No DN 50mm FLANGED FLOW METER
8 – 1 No DN 50mm FLANGED ADAPTER
9 – 1 No DN 50mm FLANGED SPIGOT PIPE, 0.4m LONG

JUNCTION 'MW4-B'

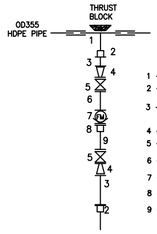

1 – 1No. OD 355x90mm HDPE TEE
2 – 2No. 80mm DIA FLANGED ADAPTER (STUB END) COMPLETE WITH METAL BACKUP RING
3 – 2 No. DN 80mm DOUBLE FLANGED PIPE WITH PADDLE FLANGE 1M LONG
4 – 2 No. 80X50MM FLANGE TAPER
5 – 2 No DN 50mm GATE VALVE
6 – 1 No DN 50mm FLANGED PIPE 0.4m LONG
7 – 1 No DN 50mm FLANGED FLOW METER
8 – 1 No DN 50mm FLANGED ADAPTER
9 – 1 No DN 50mm FLANGED SPIGOT PIPE, 0.4m LONG

JUNCTION 'MWA6-A'

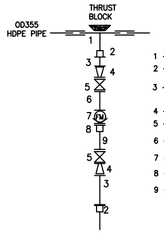

1 – 1No. OD 355x90mm HDPE TEE
2 – 2No. 80mm DIA FLANGED ADAPTER (STUB END) COMPLETE WITH METAL BACKUP RING
3 – 2 No. DN 80mm DOUBLE FLANGED PIPE WITH PADDLE FLANGE 1M LONG
4 – 2 No. 80X50MM FLANGE TAPER
5 – 2 No DN 50mm GATE VALVE
6 – 1 No DN 50mm FLANGED PIPE 0.4m LONG
7 – 1 No DN 50mm FLANGED FLOW METER
8 – 1 No DN 50mm FLANGED ADAPTER
9 – 1 No DN 50mm FLANGED SPIGOT PIPE, 0.4m LONG

JUNCTION 'MWA8-A'

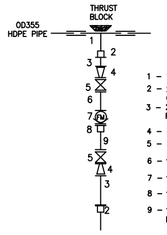

1 – 1No. OD 355x110mm HDPE TEE
2 – 2No. 100mm DIA FLANGED ADAPTER (STUB END) COMPLETE WITH METAL BACKUP RING
3 – 2 No. DN 100mm DOUBLE FLANGED PIPE WITH PADDLE FLANGE 1M LONG
4 – 2 No. 100X50MM FLANGE TAPER
5 – 2 No DN 50mm GATE VALVE
6 – 1 No DN 50mm FLANGED PIPE 0.4m LONG
7 – 1 No DN 50mm FLANGED FLOW METER
8 – 1 No DN 50mm FLANGED ADAPTER
9 – 1 No DN 50mm FLANGED SPIGOT PIPE, 0.4m LONG

JUNCTION 'MWA8'

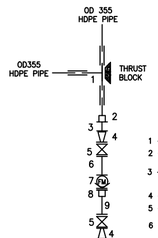

1 – 1No. OD 355x355 EQUAL HDPE TEE
2 – 2No. 300mm DIA FLANGED ADAPTER (STUB END) COMPLETE WITH METAL BACKUP RING
3 – 2 No. DN 300mm DOUBLE FLANGED PIPE WITH PADDLE FLANGE 1M LONG
4 – 2 No. 300X100MM FLANGE TAPER
5 – 2 No DN 100mm GATE VALVE
6 – 1 No DN 100mm FLANGED PIPE 0.4m LONG
7 – 1 No DN 100mm FLANGED FLOW METER
8 – 1 No DN 100mm FLANGED ADAPTER
9 – 1 No DN 100mm FLANGED SPIGOT PIPE, 0.4m LONG

JUNCTION 'MWA 2-B'

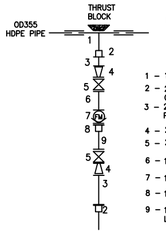

1 – 1No. OD 355x110mm HDPE TEE
2 – 2No. 100mm DIA FLANGED ADAPTER (STUB END) COMPLETE WITH METAL BACKUP RING
3 – 2 No. DN 100mm DOUBLE FLANGED PIPE WITH PADDLE FLANGE 1M LONG
4 – 2 No. 100X50MM FLANGE TAPER
5 – 2 No DN 50mm GATE VALVE
6 – 1 No DN 50mm FLANGED PIPE 0.4m LONG
7 – 1 No DN 50mm FLANGED FLOW METER
8 – 1 No DN 50mm FLANGED ADAPTER
9 – 1 No DN 50mm FLANGED SPIGOT PIPE, 0.4m LONG

JUNCTION 'MWA4-C'

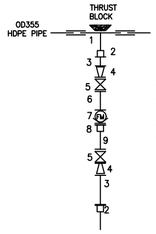

1 – 1No. OD 355x160mm HDPE TEE
2 – 2No. 150mm DIA FLANGED ADAPTER (STUB END) COMPLETE WITH METAL BACKUP RING
3 – 2 No. DN 150mm DOUBLE FLANGED PIPE WITH PADDLE FLANGE 1M LONG
4 – 2 No. 150X50MM FLANGE TAPER
5 – 2 No DN 50mm GATE VALVE
6 – 1 No DN 50mm FLANGED PIPE 0.4m LONG
7 – 1 No DN 50mm FLANGED FLOW METER
8 – 1 No DN 50mm FLANGED ADAPTER
9 – 1 No DN 50mm FLANGED SPIGOT PIPE, 0.4m LONG

JUNCTION 'MWA6-B'

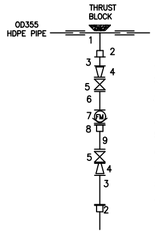

1 – 1No. OD 355x90mm HDPE TEE
2 – 2No. 80mm DIA FLANGED ADAPTER (STUB END) COMPLETE WITH METAL BACKUP RING
3 – 2 No. DN 80mm DOUBLE FLANGED PIPE WITH PADDLE FLANGE 1M LONG
4 – 2 No. 80X50MM FLANGE TAPER
5 – 2 No DN 50mm GATE VALVE
6 – 1 No DN 50mm FLANGED PIPE 0.4m LONG
7 – 1 No DN 50mm FLANGED FLOW METER
8 – 1 No DN 50mm FLANGED ADAPTER
9 – 1 No DN 50mm FLANGED SPIGOT PIPE, 0.4m LONG

JUNCTION 'MWA8-B'

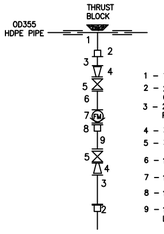

1 – 1No. OD 355x 355mm HDPE TEE
2 – 2No. 100mm DIA FLANGED ADAPTER (STUB END) COMPLETE WITH METAL BACKUP RING
3 – 2 No. DN 100mm DOUBLE FLANGED PIPE WITH PADDLE FLANGE 1M LONG
4 – 2 No. 100X50MM FLANGE TAPER
5 – 2 No DN 50mm GATE VALVE
6 – 1 No DN 50mm FLANGED PIPE 0.4m LONG
7 – 1 No DN 50mm FLANGED FLOW METER
8 – 1 No DN 50mm FLANGED ADAPTER
9 – 1 No DN 50mm FLANGED SPIGOT PIPE, 0.4m LONG

JUNCTION 'MWA3-A'

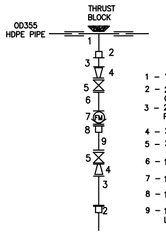

1 – 1No. OD 355x90mm HDPE TEE
2 – 2No. 80mm DIA FLANGED ADAPTER (STUB END) COMPLETE WITH METAL BACKUP RING
3 – 2 No. DN 80mm DOUBLE FLANGED PIPE WITH PADDLE FLANGE 1M LONG
4 – 2 No. 80X50MM FLANGE TAPER
5 – 2 No DN 50mm GATE VALVE
6 – 1 No DN 50mm FLANGED PIPE 0.4m LONG
7 – 1 No DN 50mm FLANGED FLOW METER
8 – 1 No DN 50mm FLANGED ADAPTER
9 – 1 No DN 50mm FLANGED SPIGOT PIPE, 0.4m LONG

JUNCTION 'MW5-A'

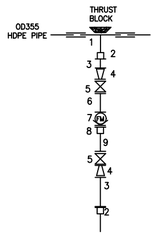

1 – 1No. OD 355x110mm HDPE TEE
2 – 2No. 100mm DIA FLANGED ADAPTER (STUB END) COMPLETE WITH METAL BACKUP RING
3 – 2 No. DN 100mm DOUBLE FLANGED PIPE WITH PADDLE FLANGE 1M LONG
4 – 2 No. 100X50MM FLANGE TAPER
5 – 2 No DN 50mm GATE VALVE
6 – 1 No DN 50mm FLANGED PIPE 0.4m LONG
7 – 1 No DN 50mm FLANGED FLOW METER
8 – 1 No DN 50mm FLANGED ADAPTER
9 – 1 No DN 50mm FLANGED SPIGOT PIPE, 0.4m LONG

JUNCTION 'MWA7-A'

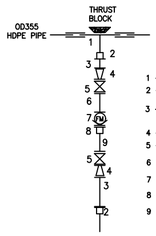

1 – 1No. OD 355x110mm HDPE TEE
2 – 2No. 100mm DIA FLANGED ADAPTER (STUB END) COMPLETE WITH METAL BACKUP RING
3 – 2 No. DN 100mm DOUBLE FLANGED PIPE WITH PADDLE FLANGE 1M LONG
4 – 2 No. 100X50MM FLANGE TAPER
5 – 2 No DN 50mm GATE VALVE
6 – 1 No DN 50mm FLANGED PIPE 0.4m LONG
7 – 1 No DN 50mm FLANGED FLOW METER
8 – 1 No DN 50mm FLANGED ADAPTER
9 – 1 No DN 50mm FLANGED SPIGOT PIPE, 0.4m LONG

JUNCTION 'MWA2-A'

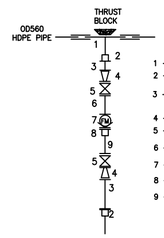

1 – 1No. OD 560x560mm HDPE TEE
2 – 2No. OD 560mm DIA FLANGED ADAPTER (STUB END) COMPLETE WITH METAL BACKUP RING
3 – 2 No. DN 560mm DOUBLE FLANGED PIPE WITH PADDLE FLANGE 1M LONG
4 – 2 No. 500X100MM FLANGE TAPER
5 – 2 No DN 100mm GATE VALVE
6 – 1 No DN 100mm FLANGED PIPE 1.0m LONG
7 – 1 No DN 100mm FLANGED FLOW METER
8 – 1 No DN 100mm FLANGED ADAPTER
9 – 1 No DN 100mm FLANGED SPIGOT PIPE, 0.5m LONG

JUNCTION 'MWA4-A'

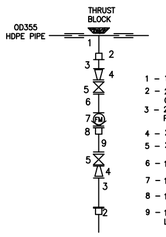

1 – 1No. OD 355x160mm HDPE TEE
2 – 2No. 150mm DIA FLANGED ADAPTER (STUB END) COMPLETE WITH METAL BACKUP RING
3 – 2 No. DN 150mm DOUBLE FLANGED PIPE WITH PADDLE FLANGE 1M LONG
4 – 2 No. 150X50MM FLANGE TAPER
5 – 2 No DN 50mm GATE VALVE
6 – 1 No DN 50mm FLANGED PIPE 0.4m LONG
7 – 1 No DN 50mm FLANGED FLOW METER
8 – 1 No DN 50mm FLANGED ADAPTER
9 – 1 No DN 50mm FLANGED SPIGOT PIPE, 0.4m LONG

JUNCTION 'MWA5-B'

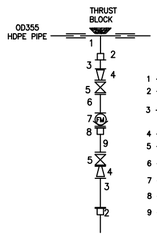

1 – 1No. OD 355x110mm HDPE TEE
2 – 2No. 100mm DIA FLANGED ADAPTER (STUB END) COMPLETE WITH METAL BACKUP RING
3 – 2 No. DN 100mm DOUBLE FLANGED PIPE WITH PADDLE FLANGE 1M LONG
4 – 2 No. 100X50MM FLANGE TAPER
5 – 2 No DN 50mm GATE VALVE
6 – 1 No DN 50mm FLANGED PIPE 0.4m LONG
7 – 1 No DN 50mm FLANGED FLOW METER
8 – 1 No DN 50mm FLANGED ADAPTER
9 – 1 No DN 50mm FLANGED SPIGOT PIPE, 0.4m LONG

JUNCTION 'MWA7-B'

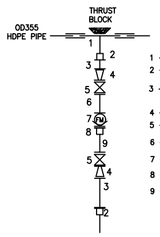

1 – 1No. OD 355x90mm HDPE TEE
2 – 2No. 80mm DIA FLANGED ADAPTER (STUB END) COMPLETE WITH METAL BACKUP RING
3 – 2 No. DN 80mm DOUBLE FLANGED PIPE WITH PADDLE FLANGE 1M LONG
4 – 2 No. 80X50MM FLANGE TAPER
5 – 2 No DN 50mm GATE VALVE
6 – 1 No DN 50mm FLANGED PIPE 0.4m LONG
7 – 1 No DN 50mm FLANGED FLOW METER
8 – 1 No DN 50mm FLANGED ADAPTER
9 – 1 No DN 50mm FLANGED SPIGOT PIPE, 0.4m LONG

JUNCTION 'MWA2-C'

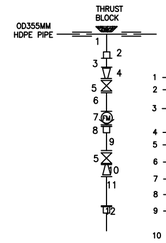

1 – 1No. OD 355x355mm HDPE TEE
2 – 1No. OD 355mm DIA FLANGED ADAPTER (STUB END) COMPLETE WITH METAL BACKUP RING
3 – 1 No. DN 300mm DOUBLE FLANGED PIPE WITH PADDLE FLANGE 1M LONG
4 – 1 No. 300X100MM FLANGE TAPER
5 – 2 No DN 100mm GATE VALVE
6 – 1 No DN 100mm FLANGED PIPE 1.0m LONG
7 – 1 No DN 100mm FLANGED FLOW METER
8 – 1 No DN 100mm FLANGED ADAPTER
9 – 1 No DN 100mm FLANGED SPIGOT PIPE, 0.5m LONG
10 –1 No. 100X500MM FLANGE TAPER
11 –1 No. DN 500mm DOUBLE FLANGED PIPE WITH PADDLE FLANGE 1M LONG
12 –1No. OD 560mm DIA FLANGED ADAPTER (STUB END) COMPLETE WITH METAL BACKUP RING

NODES WITH PRV & FLOW METER DETAILS

KAHAWA –MWIHOKO RING MAIN
DETAIL OF INTERCONNECTION MWA-1 CH 3+750

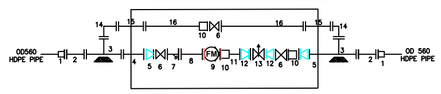

DESCRIPTION
1 – 2No. DN 560mm DIA. FLANGED ADAPTER (STUB END) COMPLETE WITH METAL BACK UP RING
2 – 2No. DN 500mm DOUBLE FLANGED PIPE, 1m LONG
3 – 2No. DN 500X150mm FLANGED TEE
4 – 2 No. DN 500mm DOUBLE FLANGED PIPE 1M LONG WITH PADDLE FLANGE
5 – 2 No. DN 500x150mm FLANGED TAPER
6 – 3No. DN 150mm GATE VALVE
7 – 1No. DN 150mm STRAINER
8 – 1No. DN 150mm DOUBLE FLANGED PIPE 1M LONG
9 – 1No. DN 150mm FLOW METER
10 – 3No. DN 150mm FLANGED ADAPTER
11 – 1No. DN 150mm SPIGOT FLANGED PIPE 0.75M LONG
12 – 1No. 150X125mm TAPER
13 – 1No. DN 125mm PRV
14 – 2 No. DN 150mm 90 degree bends
15 – 2 No DN 150mm Double Flange Pipe with Paddle, 1M Long
16 – 2 No DN 150mm Double Flange Pipe, 1M Long

KAHAWA – MWIHOKO RING MAINS
DETAIL OF INTERCONNECTION MWA-2 CH 6+900

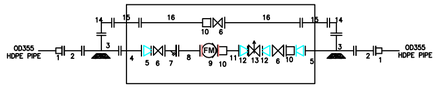

DESCRIPTION
1 – 2No. DN 355mm DIA. FLANGED ADAPTER (STUB END) COMPLETE WITH METAL BACK UP RING
2 – 2No. DN 300mm DOUBLE FLANGED PIPE, 1m LONG
3 – 2No. DN 300X150mm FLANGED TEE
4 – 2 No. DN 300mm DOUBLE FLANGED PIPE WITH PUDDLE FLANGE, 1M LONG
5 – 2No. DN 300x150mm FLANGED TAPER
6 – 3No. DN 150mm GATE VALVE
7 – 1No. DN 150mm STRAINER
8 – 1No. DN 150mm DOUBLE FLANGED PIPE 0.5M LONG
9 – 1No. DN 150mm FLOW METER
10 – 3No. DN 150mm FLANGED ADAPTER
11 – 1 No. DN 150mm SPIGOT FLANGED PIPE 0.5M LONG
12 – 150X50MM TAPER
13 – 1No. DN 50mm PRV
14 – 2 No. DN 150mm 90 degree bends
15 – 2 No DN 150mm Double Flange Pipe with Paddle
16 – 2 No DN 150mm Double Flange Pipe, 0.5M Long

LEGEND:

DN – NOMINAL DIAMETER (STEEL)

OD – OUTSIDE DIAMETER (HDPE)

FM – FLOW METER, arrow indicates normal flow direction

PRESSURE REDUCING VALVE

N

40 0 40 80 120M

REVISIONS

REV.No.	DATE	DESCRIPTION

Client

ATHI WATER
Transforming Life. Inspiring Progress

ATHI WATER WORKS DEVELOPMENT AGENCY

Project

NAIROBI SATELLITE TOWNS WATER & SANITATION DEV. PROGRAMME
MWIHOKO WATER SUPPLY PROJECT

CONSULTANTS

Pasch+Partners consulting engineers
in Association with
Norken International Ltd
ENGINEERING AND MANAGEMENT CONSULTANTS
Pasch&Partners Building, C. O.Box Street
Tel : 254 (0) 20 2718 000/2718 001
Fax : 254 (0) 20 2718 002/2718 003
Cell : 254 722 747 616 /0733 747 616 /254 (0) 20 2718 000
Email : info@norken.co.ke Website: www.norken.co.ke

Drawing Title

MWIHOKO DISTRIBUTION NODE DETAILS

CHIEF ENGINEER: AG		**Designed by**	EK
		Checked by	JWK
Scale 1:2000		**Date:** DECEMBER 2022	
Job No.	P1596		

DRAWING No. MW04/DNS/017

STANDARD DRAWINGS

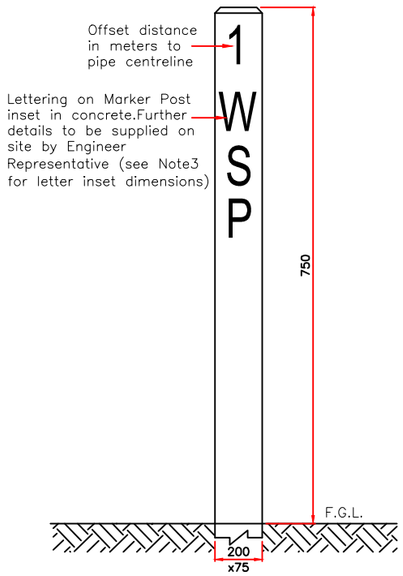

PIPELINE
MARKER POST LETTERING
N.T.S

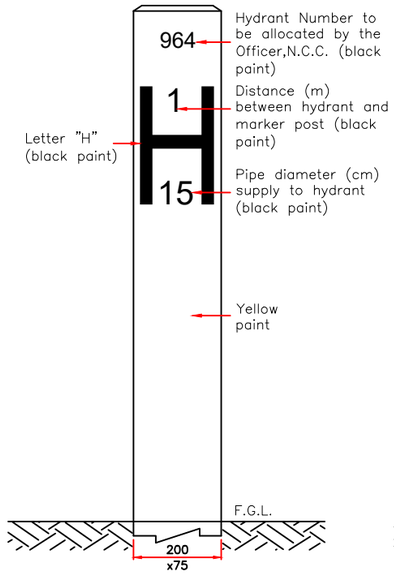

FIRE HYDRANT
MARKER POST LETTERING
N.T.S

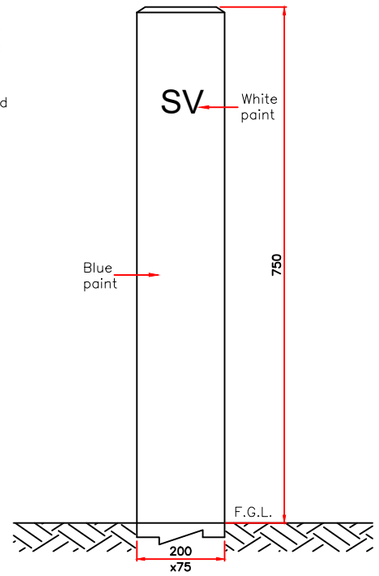

SLUICE VALVE
MARKER POST LETTERING
N.T.S

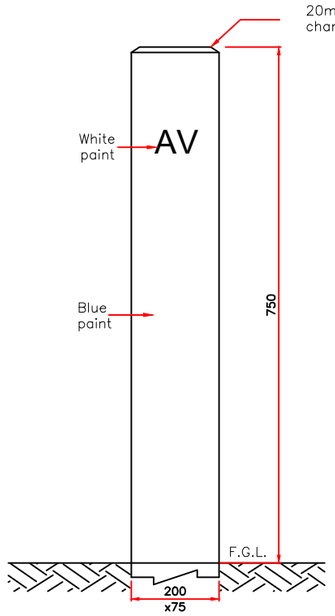

AIR VALVE
MARKER POST LETTERING
N.T.S

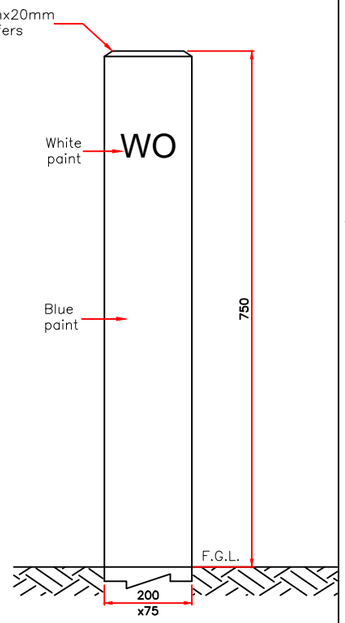

WASHOUT
MARKER POST LETTERING
N.T.S

NOTE

1. All dimensions are in meters unless otherwise stated
2. All reinforcements in precast units to be to BS 4483
3. Lettering on marker post to be engraved about 8mm in concrete
4. Marker posts to be positioned in safe locations where possible against boundary of road reserve.
5. Quarry dust shall not have any grains of diameter greater than 5mm and fines of diameter less than 0.05mm shall not exceed 15%
6. All corners of precast units are to be chamfered (20mmx20mm)

LEGEND

F.G.L.–Finished Ground Level

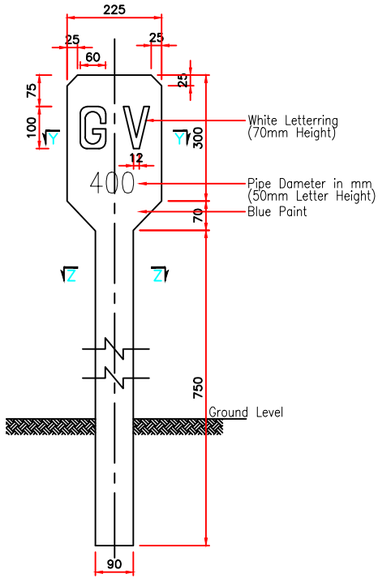

MARKER POST FOR GATE VALVE
(DISTRIBUTION NETWORK)
N.T.S

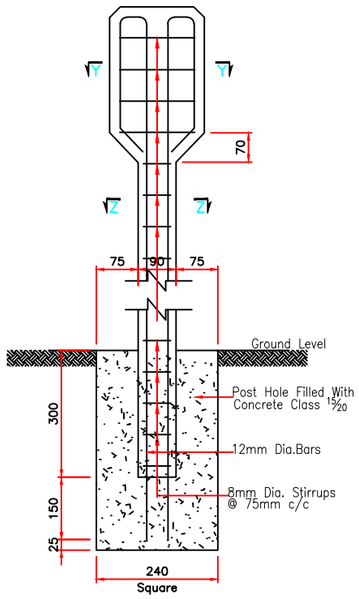

MARKER POST
REINFORCEMENT DETAILS
(DISTRIBUTION NETWORK)
N.T.S

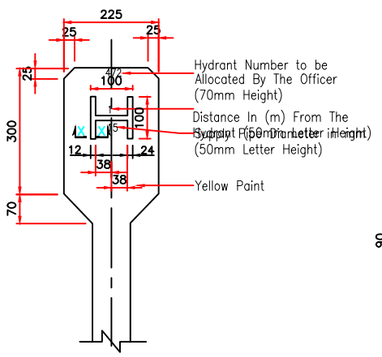

FIREHYDRANT POST
N.T.S

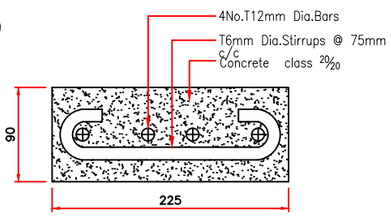

SECTION Y–Y
N.T.S

SECTION X–X
N.T.S

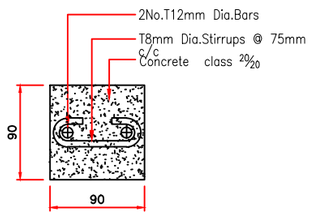

SECTION Z–Z
N.T.S

NOTE

1. Details For Indicator Posts to be as Follows:

For	Use
Gate Valve	GV
Air Valve	AV
Washout	WO
Fire Hydrant	H
Water Main	WM
Bulk Meter	M

2. All Indicator Posts Except Fire Hydrant Posts to be Painted With 2 Coats of Blue Oil Based Paint And Lettering to Engineer's Approval.
3. Maker Posts to be Positioned in Safe Locations Where Possible Aganinst Boundary of Road Reserve.

REVISIONS

REV.No.	DATE	DESCRIPTION

Client

ATHI WATER WORKS DEVELOPMENT AGENCY

Project

NAIROBI SATELLITE TOWNS WATER AND SANITATION DEVELOPMENT PROGRAMME
(PHASE 1)
MWIHOKO WATER SUPPLY PROJECT

CONTRACTOR

Posch+Partners consulting engineers in Association with Norken International Ltd

Drawing Title

MARKER POSTS DETAILS
FOR
PIPE,FIRE HYDRANT,AIR AND SLUICE VALVE

CHIEF ENGINEER AG	Designed by EK Checked by JW
Scale AS SHOWN	Date MARCH 2023
Job No. P1596	
Status	DRAWING No. MW04/SD/18

RIVER CROSSING AT CHAINAGE 3+720

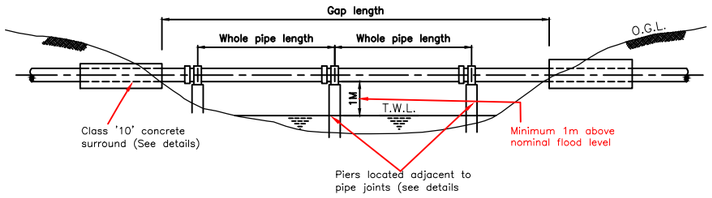

RIVER CROSSING
N.T.S

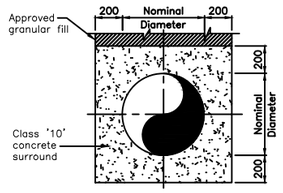

SECTION 2–2
N.T.S

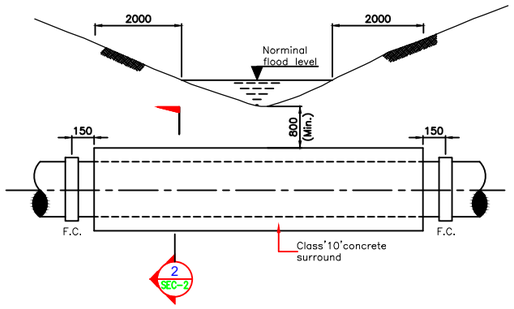

TYPICAL UNDER–CROSSING TO STREAMS & DRAINS
N.T.S

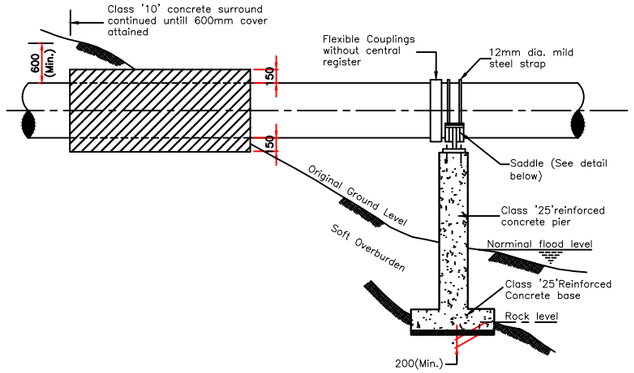

DETAIL SHOWING ELEVATION AT BANKSIDE
ON OVER–CROSSINGS
N.T.S

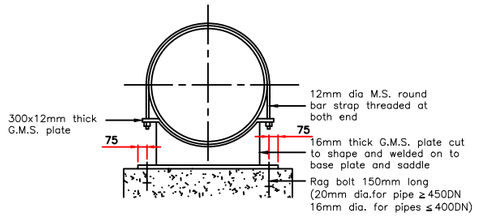

SADDLE CLAMP DETAIL
N.T.S

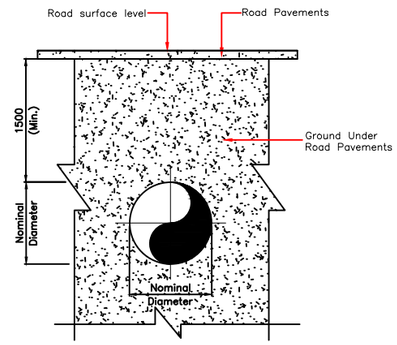

SECTION SHOWING TYPICAL ROAD–CROSSING
(MICRO DRILLED TUNNEL)

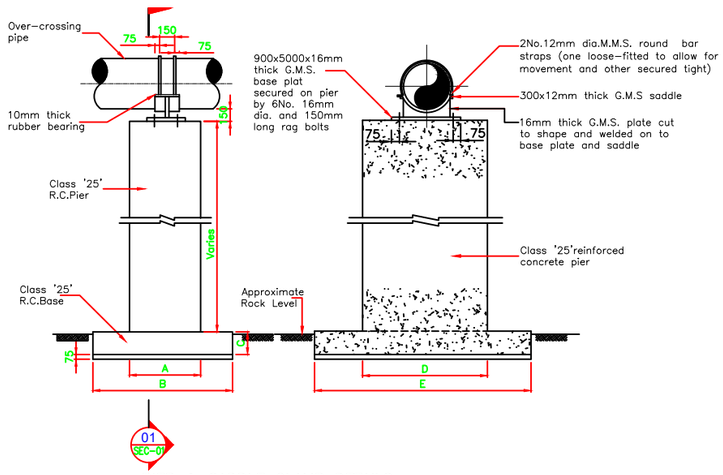

PIER & SADDLE CLAMP DETAILS
N.T.S

TABLE OF PIER SIZES
(BASED ON 15 BAR PRESSURE)

PIPE SIZE	DIMENSIONS				
	A	B	C	D	E
150–250 DN	500	1000	250	700	1400
300 DN	500	1200	250	800	1600
350 DN	600	1200	250	900	1600
400 DN	600	1200	300	1000	1800
450 DN	700	1200	300	1100	2000
500 DN	700	1200	300	1200	2000
600 DN	800	1400	300	1400	2200
700 DN	800	1400	400	1600	2400
900 DN	900	1600	400	1800	2600
1000 DN	900	1600	400	2000	3000

NOTES.

1. All dimensions are in millimeters unless otherwise stated
2. The fill material above the concrete surround in all River Under–crossings will consist of 75mm compacted hardcore with binder.
3. For reinforcement drawings of piers refer to Structural Drawings.
4. Concrete surround shall be continued 1m clear on either side of the road at all road crossings.
5. Bottom of Pipe crossing is minimum 1m above nominal flood level

LEGEND

O.G.L.–Original Ground Level
E.W.L.–Top water level
N.T.S.–Not to Scale

REVISIONS

REV.No.	DATE	DESCRIPTION

Client

ATHI WATER WORKS DEVELOPMENT AGENCY

Project

NAIROBI SATELLITE TOWNS WATER AND SANITATION DEVELOPMENT PROGRAMME (PHASE 1)
MWIHOKO WATER SUPPLY PROJECT

CONTRACTOR

Posch + Partners consulting engineers in Association with Norken International Ltd

Drawing Title

ROAD & RIVER CROSSING DETAILS

CHIEF ENGINEER AG	Designed by EK
	Checked by JW
Scale AS SHOWN	Date MARCH 2023
Job No. P1596	
Status	DRAWING No. MW04/SD/19

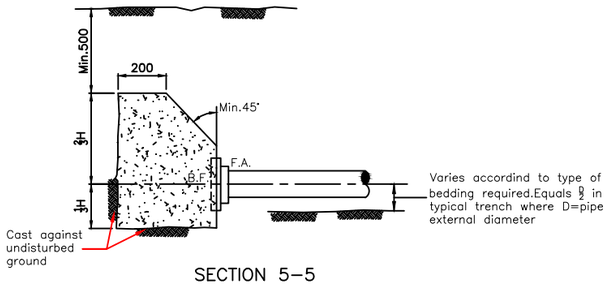

SECTION 5–5
N.T.S

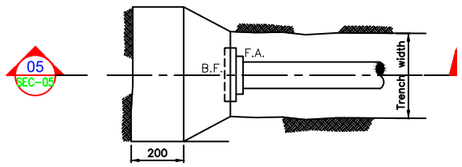

PLAN
WHERE BLANK END HAS
NO ISOLATING VALVE
N.T.S

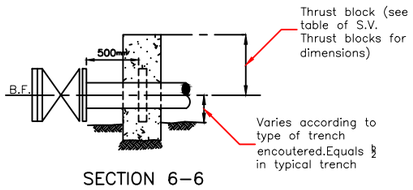

SECTION 6–6
N.T.S

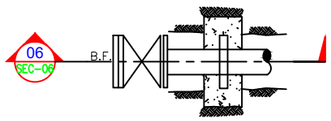

PLAN
WHERE BLANK END HAS
ISOLATING VALVE
N.T.S

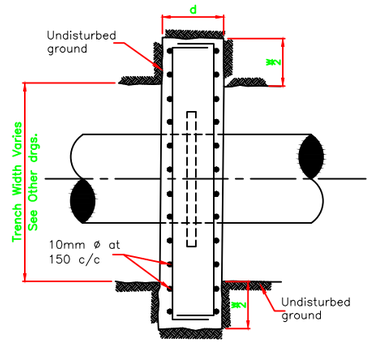

SECTION 2–2
N.T.S

TEST HEAD (m)	MAIN SIZE (MM)	BLOCK TYPE
120 See Note 8	700	E
	600	E
	500	D
	450	D
	400	D
	350	C
	300	B
	250	B
	200	A
	150	A
	100	A

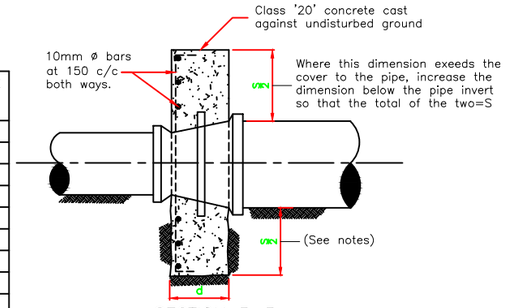

SECTION 3–3
N.T.S

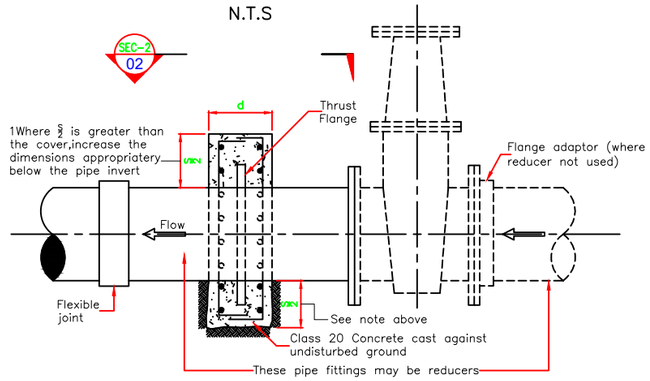

ELEVATION
ANCHOR BLOCKS FOR SLUICE VALVES
N.T.S

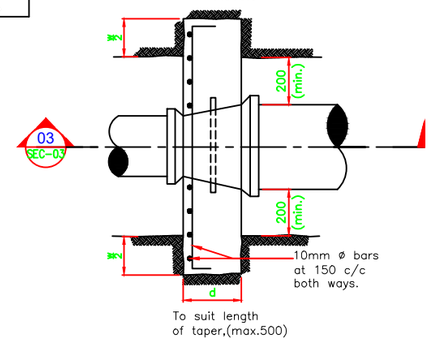

PLAN
ANCHOR BLOCKS FOR TAPERS
N.T.S

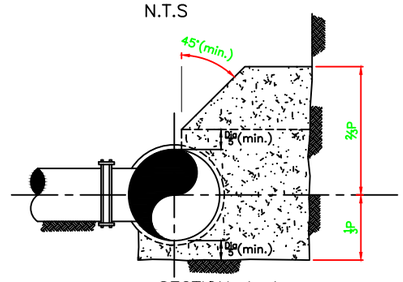

SECTION 4–4
N.T.S

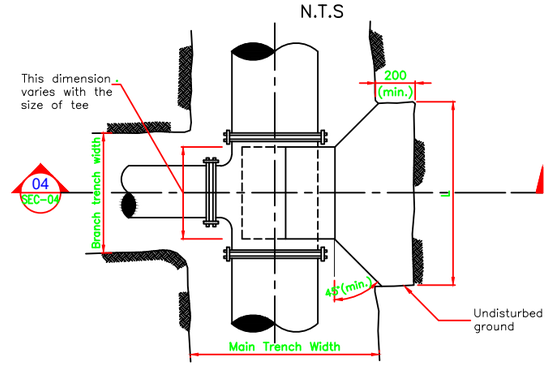

PLAN
THRUST BLOCKS FOR TEE
N.T.S

BLOCK TYPE	S (m)	W (m)	d (mm)	MAIN STEEL	DISTRIBUTION STEEL
A	0.5	0.5	300	Y10–150	Y10–150
B	0.5	0.9	300	Y10–150	Y10–150
C	0.5	1.2	400	Y12–150	Y10–150
D	0.6	1.8	500	Y16–150	Y12–150
E	1.0	2.2	500	Y20–150	Y12–150

DETAILS OF ANCHOR BLOCKS FOR TAPER
& SLUICE VALVES

TEST HEAD (m)	MAIN SIZE (MM)	DIMENSIONS (S)mx(W)m TAPER (SMALLER SIZE)mm											
		800	700	600	500	450	400	350	300	250	200	150	100
120 See Note 8	1000	D	—	—	—	—	—	—	—			—	—
	900	C	D	—	—	—	—	—	—	—	—	—	—
	800	—	C	D	—	—	—	—	—	—	—	—	—
	700	—	—	C	D	—	—	—	—	—	—	—	—
	600	—	—	—	C	C	D	—	—	—	—	—	—
	500	—	—	—	—	A	B	C	—	—	—	—	—
	450	—	—	—	—	—	A	B	C	—	—	—	—
	400	—	—	—	—	—	—	A	B	B	—		—
	350	—	—	—	—	—	—	—	A	B	B	—	—
	300	—	—	—	—	—	—	—	—	A	A	B	B
	250	—	—	—	—	—	—	—	—	—	A	A	B
	200	—	—	—	—	—	—	—	—	—	—	A	A

TABLE OF ANCHOR BLOCKS FOR TAPERS
(CLASS "20" CONCRETE)
N.T.S

TEST HEAD (m)	MAIN SIZE (MM)	DIMENSIONS (L)mx(P)m BRANCH SIZE (mm)										
		800	700	600	500	450	400	350	300	250	200	150/100
120 See Note 8	1000	2.4x2.1	1.8x2.1	1.4x2.1	1.9x2.1	0.8x2.1	0.6x2.1	0.5x2.1	0.4x2.1	0.3x2.1	0.3x2.1	0.3x2.1
	900	2.6x1.9	2.0x1.9	1.5x1.9	1.0x1.9	0.9x1.9	0.7x1.9	0.5x1.9	0.4x1.9	0.3x1.9	0.3x1.9	0.3x1.9
	800	2.9x1.7	2.3x1.7	1.7x1.7	1.1x1.7	0.9x1.7	0.8x1.7	0.6x1.7	0.4x1.7	0.3x1.7	0.3x1.7	0.3x1.7
	700	—	2.5x1.5	1.9x1.5	1.3x1.5	1.0x1.5	0.9x1.5	0.7x1.5	0.5x1.5	0.4x1.5	0.3x1.5	0.3x1.5
	600	—	—	2.2x1.3	1.5x1.3	1.2x1.3	1.0x1.3	0.8x1.3	0.6x1.3	0.4x1.3	0.3x1.3	0.3x1.3
	500	—	—	—	1.8x1.1	1.4x1.1	1.2x1.1	0.9x1.1	0.7x1.1	0.5x1.1	0.3x1.1	0.3x1.1
	450	—	—	—	—	1.6x1.0	1.3x1.0	1.0x1.0	0.7x1.0	0.5x1.0	0.3x1.0	0.3x1.0
	400	—	—	—	—	—	1.4x0.9	1.0x0.9	0.8x0.9	0.6x0.9	0.4x0.9	0.3x0.9
	350	—	—	—	—	—	—	1.2x0.8	0.9x0.8	0.6x0.8	0.4x0.8	0.3x0.8
	300	—	—	—	—	—	—	—	1.0x0.7	0.7x0.7	0.5x0.7	0.3x0.7
	250	—	—	—	—	—	—	—	—	0.8x0.6	0.5x0.6	0.3x0.6
	200	—	—	—	—	—	—	—	—	—	0.6x0.5	0.4x0.5

TABLE OF THRUST BLOCKS FOR TEES
(CLASS "20" CONCRETE)

NOTES.

1. All concrete thrust blocks shall be constructed on and against firm ground directly. The thrust or Anchor blocks shall not be cast against black cotton soil and reference shall be made to the Engineers Representative for further instructions.
2. The concrete thrust blocks are designed to bear on the original earth surface with safe bearing pressure of 120 KN/m²
3. Concrete to be class '15' unless otherwise stated.
4. Concrete in thrust and anchor blocks must be cast clear of joints.
5. Dimension 'W' for thrust blocks on horizontal bends to suit the size of bend and clearance required for joints.
6. For table of thrust blocks for horizontal bends refer to other Drawings.
7. For thrust blocks to vertical bends refer to other Drawings.
8. The thrust blocks dimensions in the tables given hereon are for a test pressure of 12 bars .For special test pressures thrust blocks sizes are to be reduced or increased proportionately, or as directed by the Engineers Representative.
9. For sluice valves on mains of diameters greater than 700mm,thrust blocks will be individually designed to suit the actual test pressure at each location.

REVISIONS

REV.No.	DATE	DESCRIPTION

Client

ATHI WATER WORKS DEVELOPMENT AGENCY

Project

NAIROBI SATELLITE TOWNS WATER AND SANITATION DEVELOPMENT PROGRAMME (PHASE 1)
MWIHOKO WATER SUPPLY PROJECT

CONTRACTOR

Posch+Partners consulting engineers — in Association with — Norken International Ltd

Drawing Title

THRUST BLOCKS,SLUICE VALVES, TEES, BLANK ENDS, AND TAPERS

CHIEF ENGINEER AG	Designed by EK
	Checked by JW
Scale AS SHOWN	Date MARCH 2023
Job No. P1596	
Status DRAWING No. MW04/SD/20	

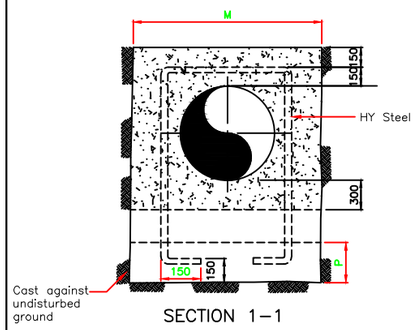

SECTION 1–1
N.T.S

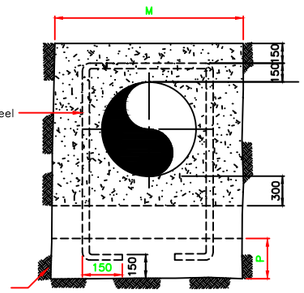

SECTION 3–3
N.T.S

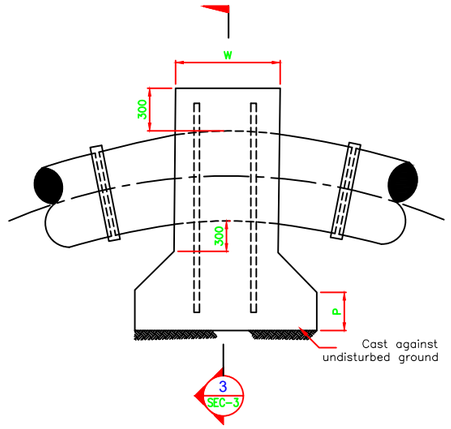

22.5° VERTICAL BENDS – TYPICAL
(SEE NOTE SEVEN)
N.T.S

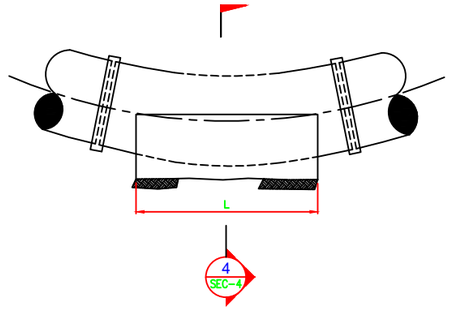

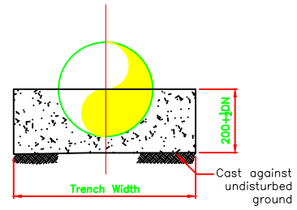

SECTION 4–4
N.T.S

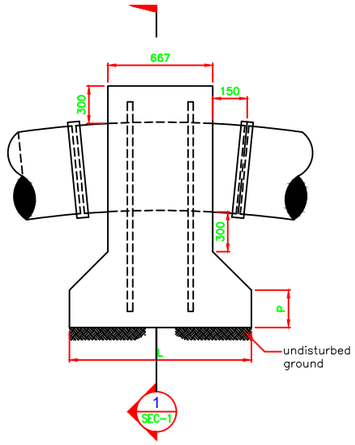

11.25° VERTICAL BENDS – TYPICAL
SEE NOTE 7)
N.T.S

TEST HEAD (m)	BEND	DIMENSIONS (L)mx(P)m											
		SIZE OF BEND DN(mm)											
		1000	900	800	700	600	500	450	400	350	300	250	200 OR LESS
120	11¼°	0.8x2.0	0.7x1.8	0.6x1.7	0.5x1.5	0.4x1.4	0.3x1.2	0.3x1.1	0.3x1.1	0.3x1.0	0.3x0.9	0.3x0.8	0.3x0.8
	22½°	1.5x2.0	1.4x1.8	1.2x1.7	1.0x1.5	0.8x1.4	0.7x1.2	0.6x1.1	0.5x1.1	0.4x1.0	0.3x0.9	0.3x0.8	0.3x0.8
	45°	3.0x2.0	2.7x1.8	2.3x1.7	2.0x1.5	1.5x1.4	1.3x1.2	1.1x1.1	0.9x1.1	0.8x1.0	0.6x0.9	0.5x0.8	0.3x0.8
	90°	5.5x2.0	4.9x1.8	4.1x1.7	3.6x1.5	2.8x1.4	2.3x1.2	2.0x1.1	1.6x1.1	1.4x1.0	1.1x0.9	0.9x0.8	0.6x0.8
150	11¼°	1.0x2.0	0.9x1.8	0.7x1.7	0.6x1.5	0.5x1.4	0.4x1.2	0.4x1.1	0.3x1.1	0.3x1.0	0.3x0.9	0.3x0.8	0.3x0.8
	22½°	1.9x2.0	1.7x1.8	1.4x1.7	1.3x1.5	1.0x1.4	0.8x1.2	0.7x1.1	0.6x1.1	0.5x1.0	0.4x0.9	0.3x0.8	0.3x0.8
	45°	3.7x2.0	3.3x1.8	2.8x1.7	2.4x1.5	1.9x1.4	1.6x1.2	1.4x1.1	1.1x1.1	0.9x1.0	0.8x0.9	0.6x0.8	0.4x0.8
	90°	6.8x2.0	6.2x1.8	5.1x1.7	4.5x1.5	3.5x1.4	2.9x1.2	2.5x1.1	2.0x1.1	1.7x1.0	1.4x0.9	1.1x08	0.7x0.8

TABLE OF THRUST BLOCKS FOR HORIZONTAL BENDS

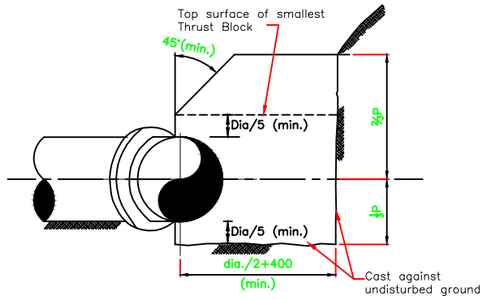

SECTION 5–5
N.T.S

TEST HEAD (m)	DIMENSIONS (L)mx(P)m							
	SIZE OF BEND DN(mm)							
	600	500	450	400	300	300	250	200
	1.4x0.6	1.4x0.5	1.4x0.5	1.2x0.5	1.2x0.5	1.0x0.5	0.8x0.5	0.6x0.5

TABLE OF THRUST BLOCKS FOR BLANK ENDS

11.25° BEND

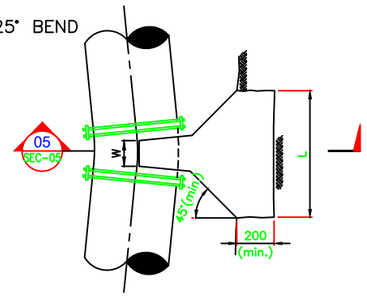

PLAN
N.T.S

90° BEND

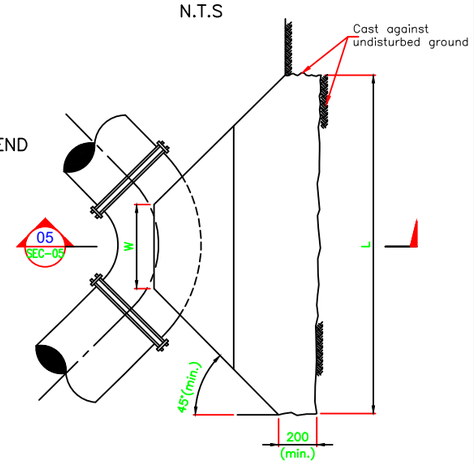

PLAN

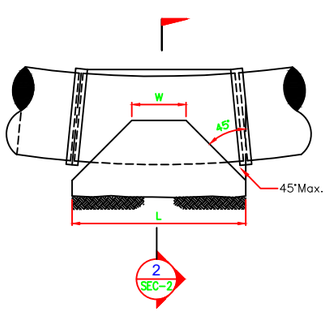

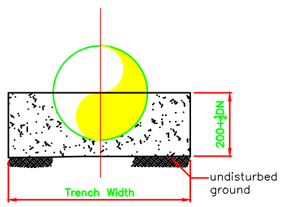

SECTION 2–2
N.T.S

22.5° BEND

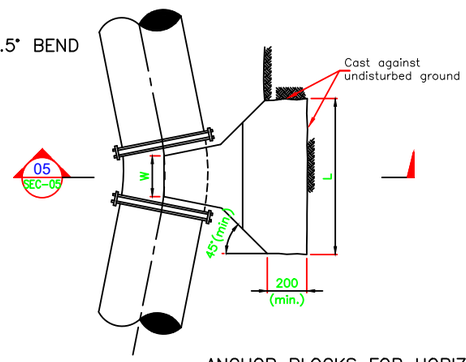

PLAN

45° BEND

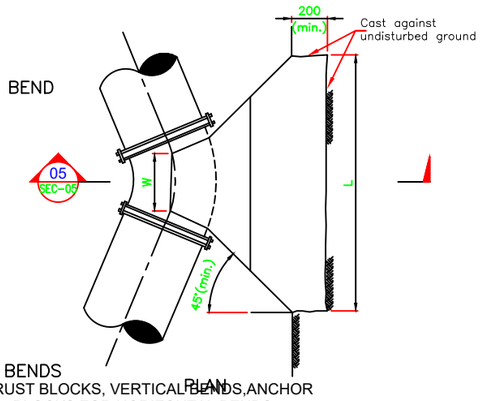

PLAN

ANCHOR BLOCKS FOR HORIZONTAL BENDS

THRUST BLOCKS, VERTICAL BENDS, ANCHOR BLOCKS FOR HORIZONTAL BENDS

NOTES.

1. All concrete thrust blocks shall be constructed on and against firm ground directly. The thrust or Anchor blocks shall not be cast against black cotton soil and reference shall be made to the Engineers Representative for further instructions.
2. The concrete thrust blocks are designed to bear on the original earth surface with safe bearing pressure of 120 KN/m²
3. Concrete to be class '15' unless otherwise stated.
4. Concrete in thrust and anchor blocks must be cast clear of joints.
5. Dimension 'W' for thrust blocks on horizontal bends to suit the size of bend and clearance required for joints.
6. For table of thrust blocks for horizontal bends refer to other Drawings.
7. For thrust blocks to horizontal bends refer to other Drawings.
8. The steel ancharing reinforcement and the dimensions L,P and M are to be decided by the Engineers representative to suit each individual bend.

LEGEND
DN–Nominal diameter
BF–Blank flange

REVISIONS

REV.No.	DATE	DESCRIPTION

Client
ATHI WATER WORKS DEVELOPMENT AGENCY

Project
NAIROBI SATELLITE TOWNS WATER AND SANITATION DEVELOPMENT PROGRAMME (PHASE 1)
MWIHOKO WATER SUPPLY PROJECT

CONTRACTOR
Posch+Partners consulting engineers in Association with Norken International Ltd

Drawing Title
THRUST BLOCKS FOR VERTICAL BENDS & BLANK ENDS

CHIEF ENGINEER AG	Designed by EK Checked by JW
Scale AS SHOWN	Date MARCH 2023
Job No. P1596	
Status	DRAWING No. MW04/SD/21

WASHOUT TYPE 1
PLAN OF OUTFALL

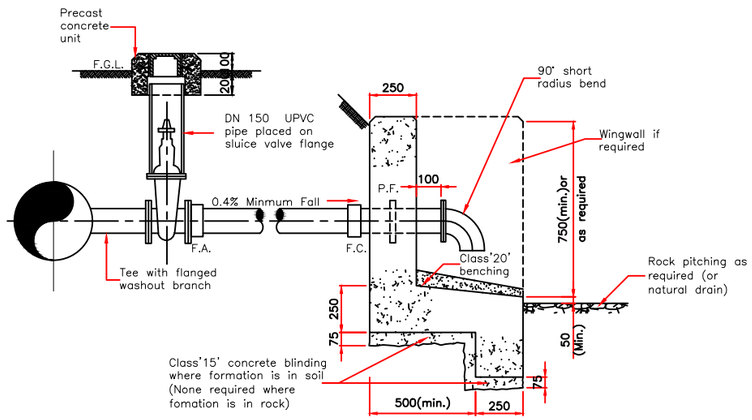

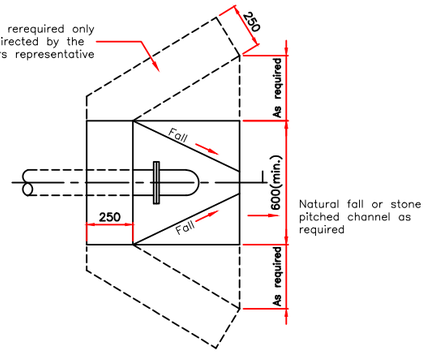

N.T.S

DOUBLE AIRVALVE

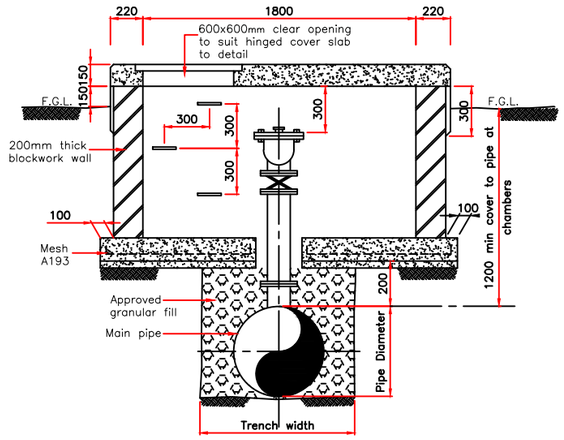

SECTION 4–4
1:20

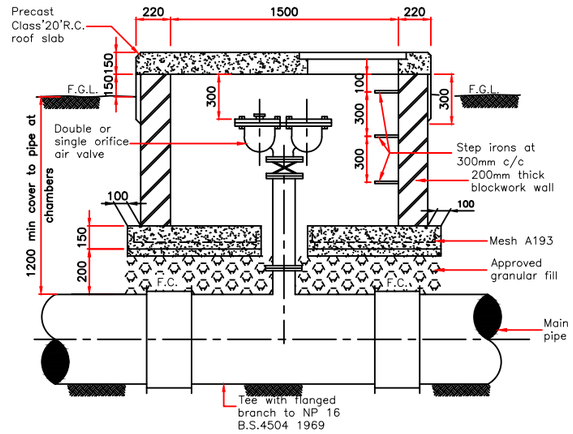

SECTION 03–03
SCALE 1:20

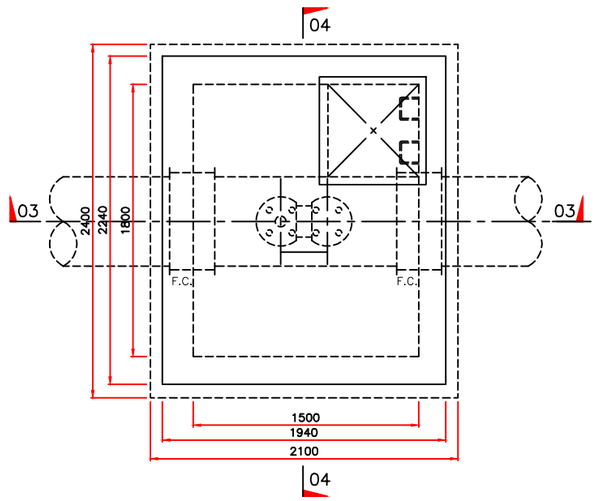

TYPE "B" AIR–VALVE CHAMBER
PLAN
1:20

NOTES.

1. All dimensionsare in millimetres unless otherwise stated.
2. All fabric reinforcements shouid conform to BS 4483.
3. Surface boxes to chambers to be of cast iron type.
4. Additional riser pieces and tapers on washout branches to be used as required by the Engineer's spresentative.
5. All external edges to be chamfered (25x25mm)

LEGEND

P.F–Puddle Flange
F.C.–Flexible Coupling
F.A.–Flange Adaptor
F.G.L.–Finished Ground Level

REVISIONS

REV.No.	DATE	DESCRIPTION

Client

ATHI WATER WORKS DEVELOPMENT AGENCY

Project

NAIROBI SATELLITE TOWNS WATER AND SANITATION DEVELOPMENT PROGRAMME (PHASE 1)
MWIHOKO WATER SUPPLY PROJECT

CONTRACTOR

Posch+Partners consulting engineers — in Association with — Norken International Ltd

Drawing Title

FIRE HYDRANT,WASHOUTS & AIRVALVES CHAMBER DETAILS

CHIEF ENGINEER AG	Designed by EK Checked by JW
Scale AS SHOWN	Date MARCH 2023
Job No.	
Status	DRAWING No.MW04/SD/22

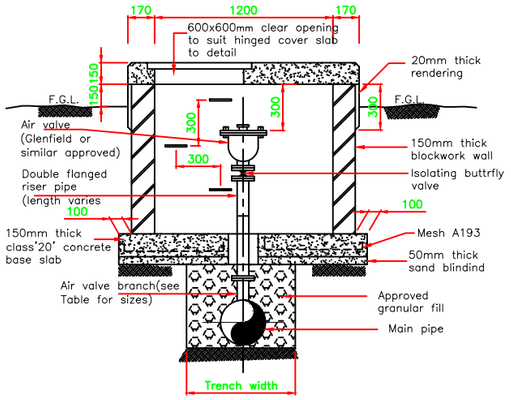

SECTION 2–2
1:20

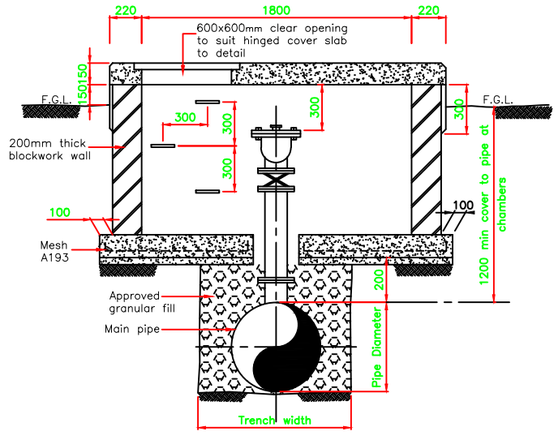

SECTION 4–4
1:20

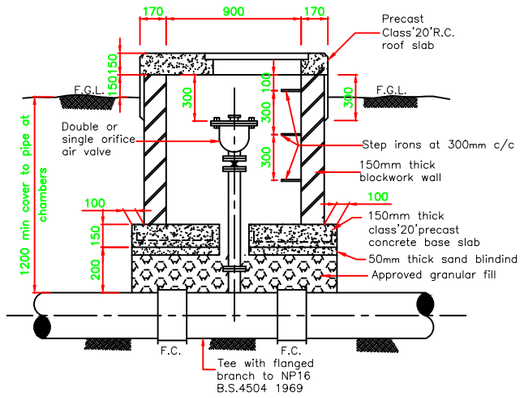

SECTION 01–01
SCALE 1:20

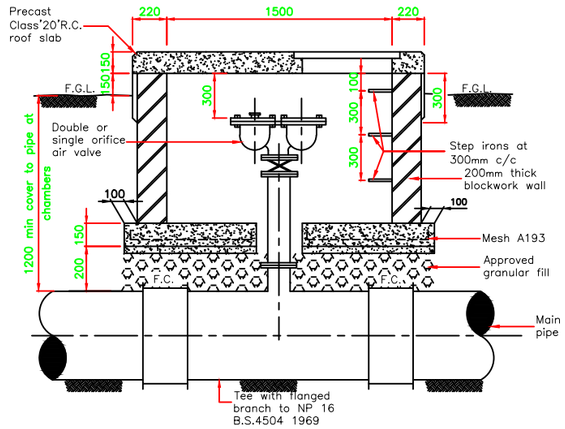

SECTION 03–03
SCALE 1:20

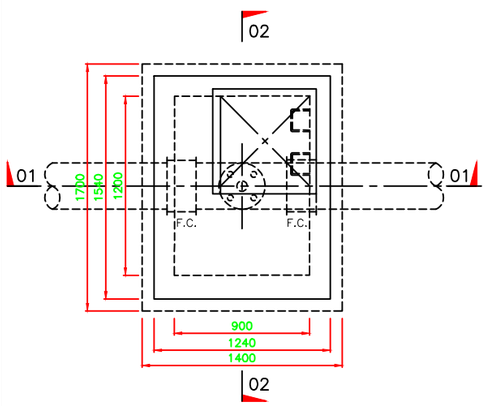

TYPE "A" AIR–VALVE CHAMBER
PLAN
1:20

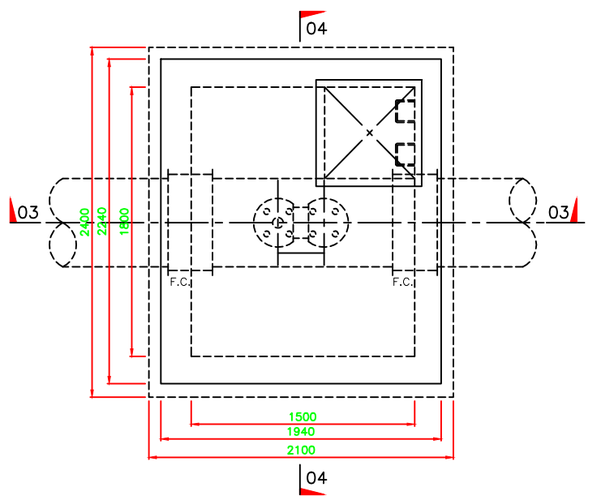

TYPE "B" AIR–VALVE CHAMBER
PLAN
1:20

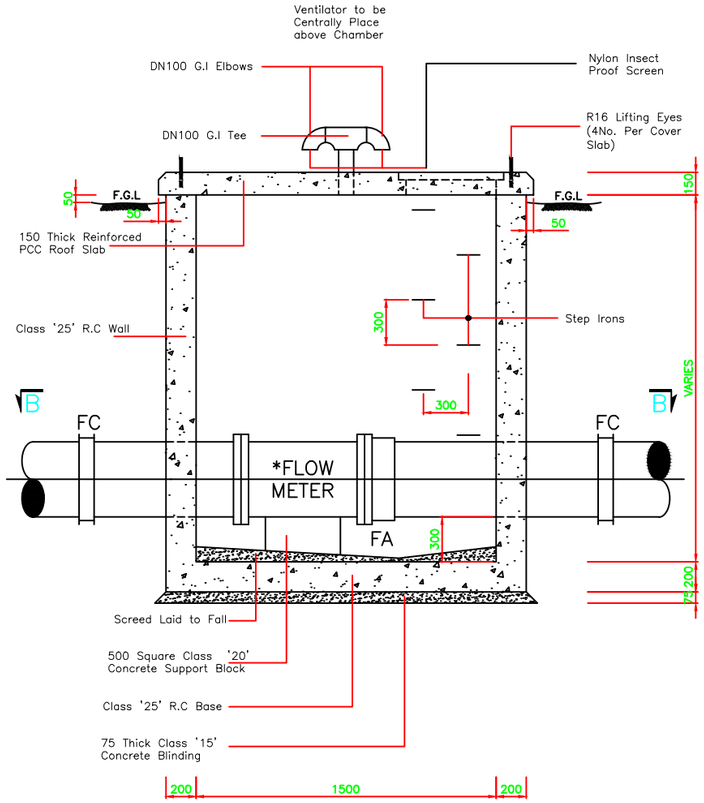

SECTION A–A
1:25

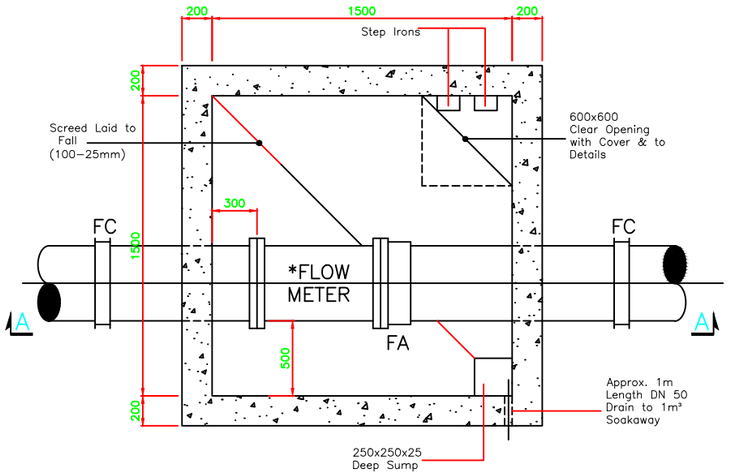

SECTIONAL PLAN B–B
FLOW–METER CHAMBER
1:25

NOTES.

1. All dimensionsare in millimetres unless otherwise stated.
2. All fabric reinforcements shouid conform to BS 4483.
3. All concrete to be class'20' unless otherwise stated.
4. All steel manhole covers to be paited after fabrication with two coats of Zinc based primer followed by two coats of Epoxide–resin paint.
5. Minimum cover to all reinforcements to be 40mm.
6. Additional riser pieces to be used as directed by the Engineer's spresentative.
7. Compaction to trench fill around sluice valve chambers to be carried out as directed by the Engineer's spresentative.

LEGEND
F.G.L.–Finished Ground Level.
F.C.–Flexible Coupling

SIZE OF MAIN	SIZE OF AIR VALVE	TYPE
UP TO DN400	DN 80	A
DN 450–DN 600	DN100	A
ABOVE DN 600	DN150	B

AIR VALVE BRANCH SIZES

REVISIONS

REV.No.	DATE	DESCRIPTION

Client
ATHI WATER WORKS DEVELOPMENT AGENCY

Project
NAIROBI SATELLITE TOWNS WATER AND SANITATION DEVELOPMENT PROGRAMME (PHASE 1)
MWIHOKO WATER SUPPLY PROJECT

CONTRACTOR
Poch+Partners Consulting Engineers in Association with Norken International Ltd

Drawing Title
AIR VALVE, SLUICE VALVE & FLOW METER CHAMBER DETAILS

CHIEF ENGINEER AG	Designed by EK
	Checked by JW
Scale AS SHOWN	Date MARCH 2023
Job No. P1596	
Status	DRAWING No. MW04/SD/23

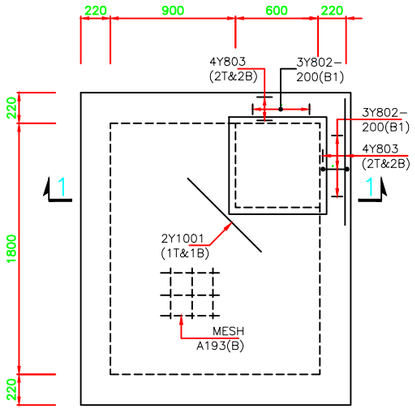

ROOF SLAB
AIR VALVE TYPE–B
SCALE: 1:20

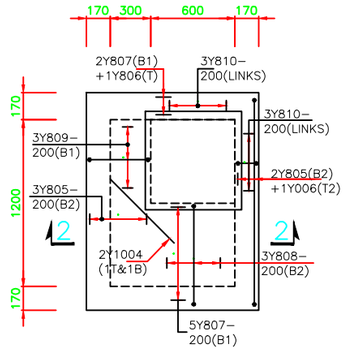

ROOF SLAB
AIR VALVE TYPE–A
SCALE: 1:20

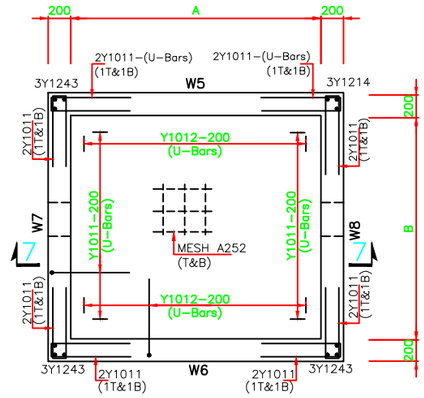

BASE SLAB
CHAMBER FOR STRAINER OR PRV
DN350(g) TO DN150(d)
SCALE: 1:25

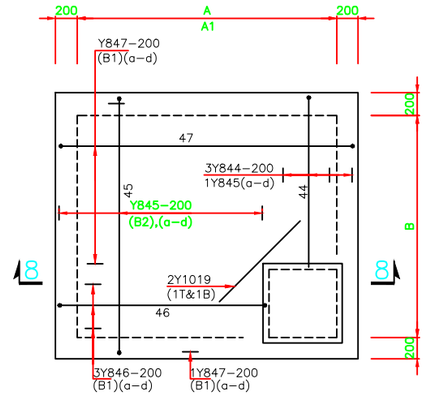

ROOF SLAB
CHAMBER FOR STRAINER OR PRV
DN350(g) TO DN150(d)
SCALE: 1:25

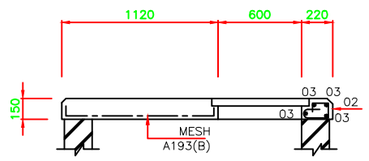

SECTION1–1
SCALE: 1:20

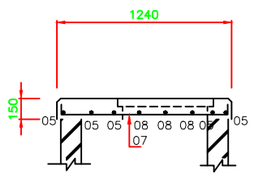

SECTION2–2
SCALE: 1:20

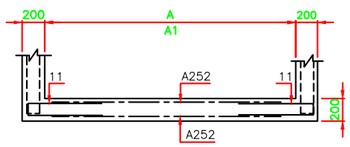

SECTION 7–7
SCALE: 1:25

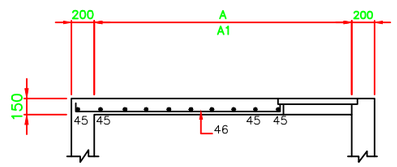

SECTION 8–8
SCALE: 1:25

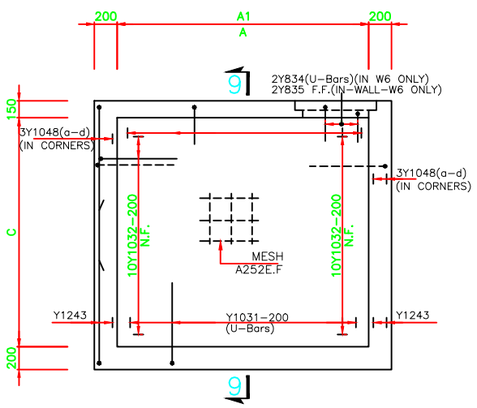

WALL–W5
WALL–W6 SIMILAR
SCALE: 1:25

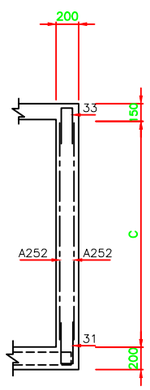

SECTION.9–9

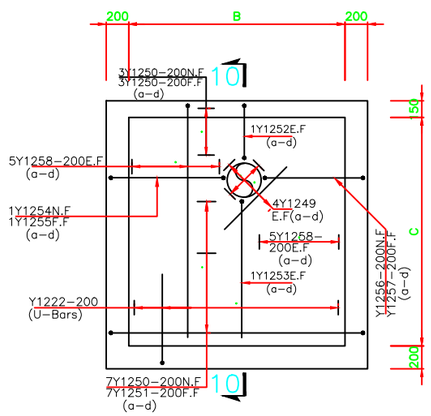

WALL–W7
WALL–W8 SIMILAR
SCALE: 1:25

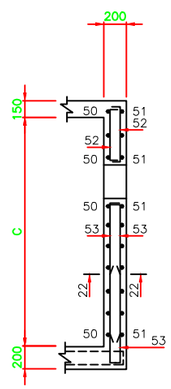

SECTION.10–10

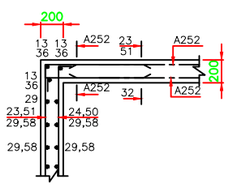

TYPICAL CORNER DETAIL
SCALE: 1:20

NOTES.

1. Concrete to be Grade 25
2. Min.cover to all Reinforcement to be 40mm except to Roof slabs 15mm
3. Bars detailed on bar bending schedule Nos. 01 to 14
4. Read inconjunction with the relevant general arrangement drawings.
5. All steel Mesh to be in accordance with BS 4483:1969 made from cold worked steel bars to BS 4461
6. Where reinforcement fouls pipes or openings bars are to be bent aside or cut and spliced with similar sized bars.Trimer bars are to be included as indicated.
7. Minimum laps to bars to be
   Y8 = 370mm
   Y10 =460mm
   Y12 =550mm
8. Minimum laps to mesh A193 =300mm
   A252 =370mm.
9. For exact length of bar marks 20,21,40,41, 42,52 and 53 will be fixed on site. The lengths shown in Bar Bending Schedules are provisional.

DIMENSIONS TABLE

STRAINER/PRV	A	B	C	A1
DN 800	3000	2800	2550	5500
DN 700	2900	2600	2450	5500
DN 600	2800	2400	2350	5000
DN 500	2600	2200	2250	5000
DN 450	2550	2200	2150	4500
DN 400	2450	2100	2050	4000
DN 350	2350	2050	2050	3500
DN 300	2300	2000	2050	3500
DN 225/250	2200	1900	1950	3000
DN 150/200	2100	1900	1900	2500

REVISIONS

REV.No.	DATE	DESCRIPTION

Client

ATHI WATER WORKS DEVELOPMENT AGENCY

Project

NAIROBI SATELLITE TOWNS WATER AND SANITATION DEVELOPMENT PROGRAMME (PHASE 1)
MWIHOKO WATER SUPPLY PROJECT

CONTRACTOR

Pasch+Partners consulting engineers in Association with Norken International Ltd

Drawing Title

R.C.DETAILS
TO CHAMBERS

CHIEF ENGINEER AG	Designed by EK Checked by JW
Scale AS SHOWN	Date MARCH 2023
Job No. P1596	
Status	DRAWING No. MW04/SD/24

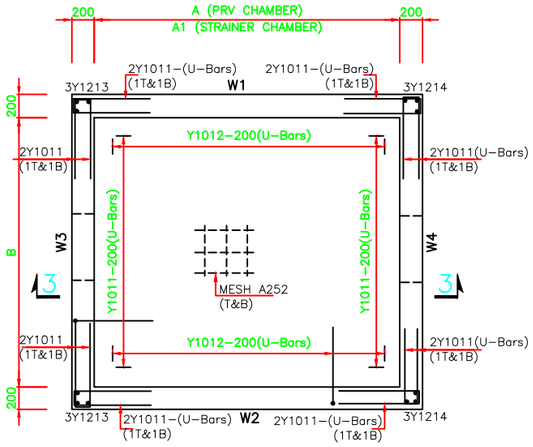

BASE SLAB
CHAMBER FOR STRAINER OR PRV
DN630(a) TO DN300(d)
SCALE: 1:25

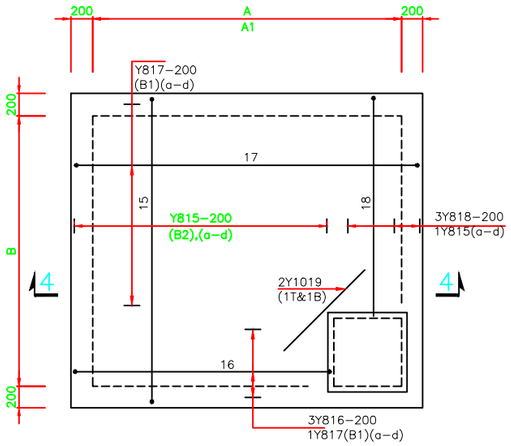

ROOF SLAB
CHAMBER FOR STRAINER OR PRV)
DN600(a) TO DN300(d)
SCALE: 1:25

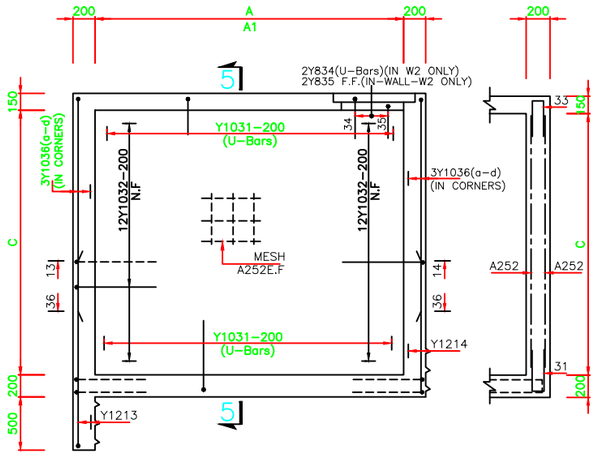

WALL-W1
WALL-W2 SIMILAR
SCALE: 1:25

SECTION.5-5

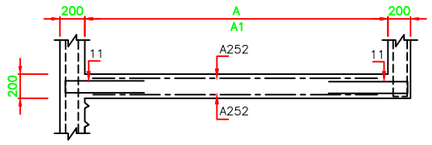

SECTION3-3
SCALE: 1:25

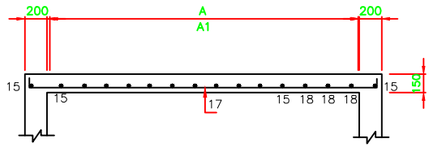

SECTION4-4
SCALE: 1:25

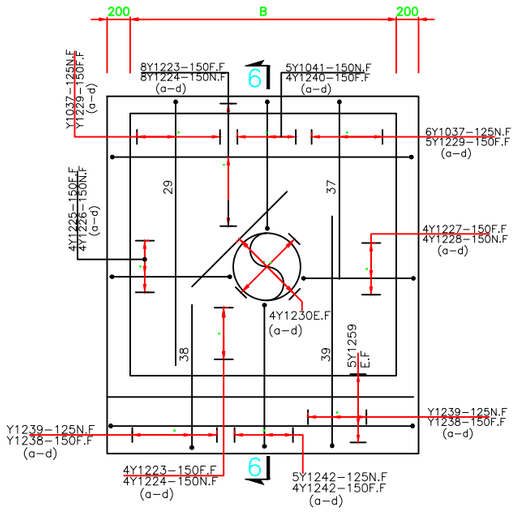

WALL-W3
SCALE: 1:25

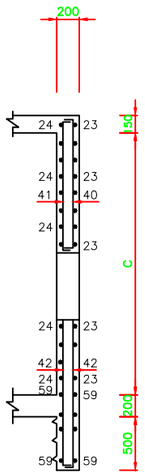

SECTION.6-6

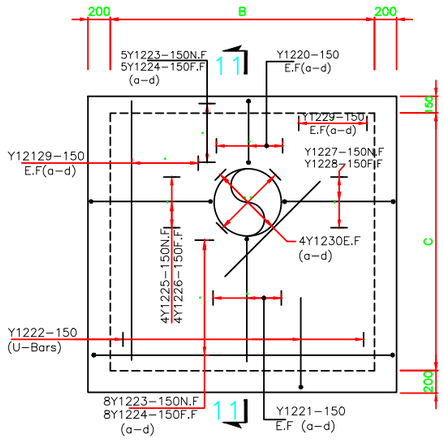

WALL-W4
SCALE: 1:25

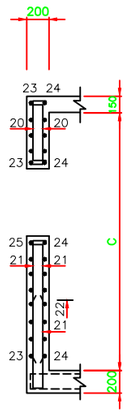

SECT.11-11

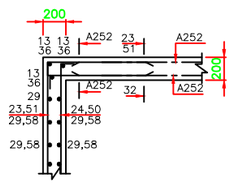

TYPICAL CORNER DETAIL
SCALE: 1:20

NOTES.

1. Concrete to be Grade 25
2. Min.cover to all Reinforcement to be 40mm except to Roof slabs 15mm
3. Bars detailed on bar bending schedule Nos. 01 to 14
4. Read inconjunction with the relevant general arrangement drawings.
5. All steel Mesh to be in accordance with BS 4483:1969 made from cold worked steel bars to BS 4461
6. Where reinforcement fouls pipes or openings bars are to be bent aside or cut and spliced with similar sized bars.Trimer bars are to be included as indicated.
7. Minimum laps to bars to be
   Y8 = 370mm
   Y10 =460mm
   Y12 =550mm
8. Minimum laps to mesh A193 =300mm
   A252 =370mm.
9. For exact length of bar marks 20,21,40,41, 42,52 and 53 will be fixed on site. The lengths shown in Bar Bending Schedules are provisional.

DIMENSIONS TABLE

STRAINER/PRV	A	B	C	A1
DN 800	3000	2800	2550	5500
DN 700	2900	2600	2450	5500
DN 600	2800	2400	2350	5000
DN 500	2600	2200	2250	5000
DN 450	2550	2200	2150	4500
DN 400	2450	2100	2050	4000
DN 350	2350	2050	2050	3500
DN 300	2300	2000	2050	3500
DN 225/250	2200	1900	1950	3000
DN 150/200	2100	1900	1900	2500

REVISIONS

REV.No.	DATE	DESCRIPTION

Client

ATHI WATER WORKS DEVELOPMENT AGENCY

Project

NAIROBI SATELLITE TOWNS WATER AND SANITATION DEVELOPMENT PROGRAMME (PHASE 1)
MWIHOKO WATER SUPPLY PROJECT

CONTRACTOR

Posch+Partners consulting engineers in Association with Norken International Ltd

Drawing Title

R.C.DETAILS TO CHAMBERS

CHIEF ENGINEER AG	Designed by EK Checked by JW
Scale AS SHOWN	Date MARCH 2023
Job No. P1596	
Status	DRAWING No. MW04/SD/25

PIPE LAYING ACC. TO EN 1610 (TYPICAL DETAILS

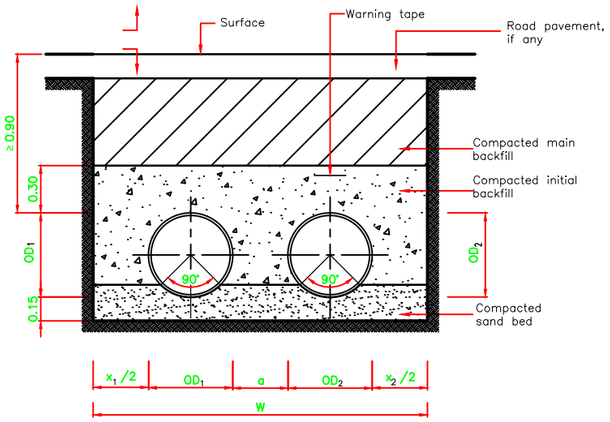

a :min. 0.35m for ø ≤ DN 700
min. 0.50m for ø ≥ DN 700

PARALLEL PIPES IN COMMON TRENCH

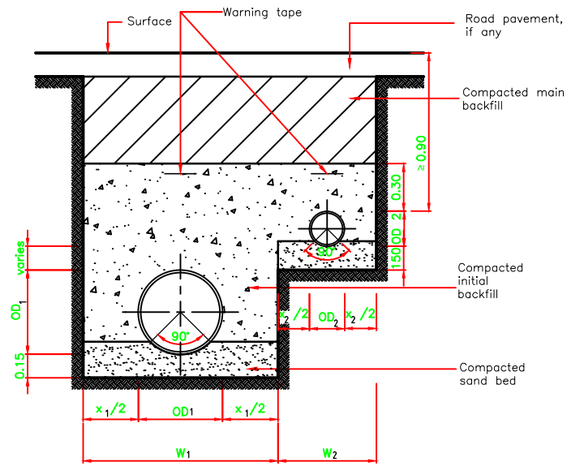

PARALLEL PIPES WITH STEPPED TRENCH

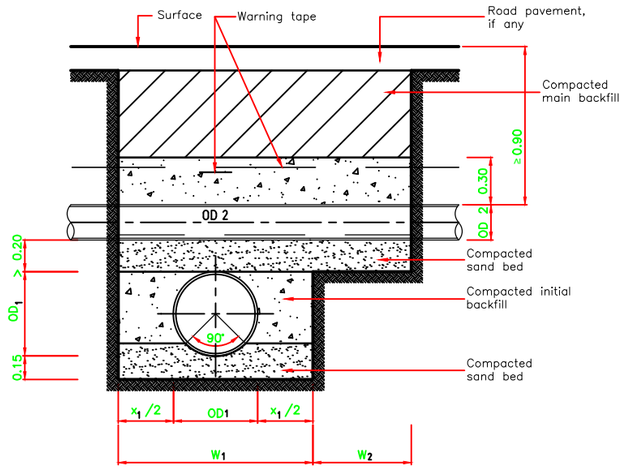

CROSSING OF PIPES

OD – External diameter
DN – Nominal diameter

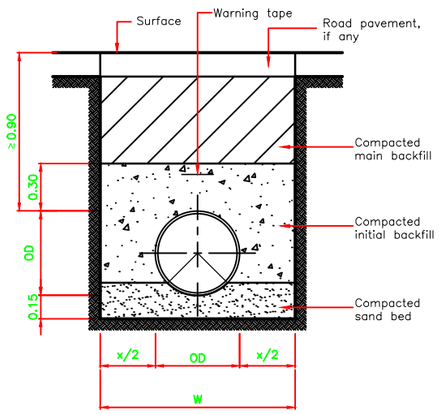

NORMAL BEDDING

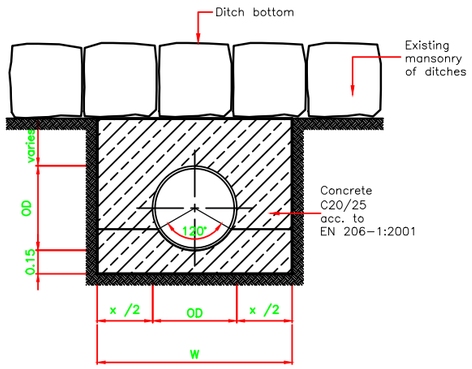

SECTION A–A

CONCRETE ENCASING AT CROSSING OF MASONRY DITCHES

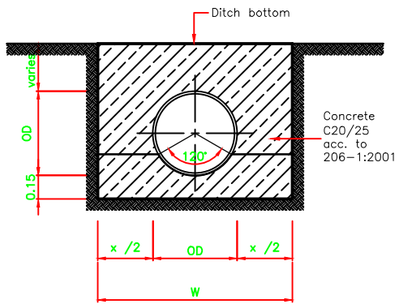

SECTION A–A

CONCRETE ENCASING AT CROSSING OF DITCHES WITHOUT MASONRY

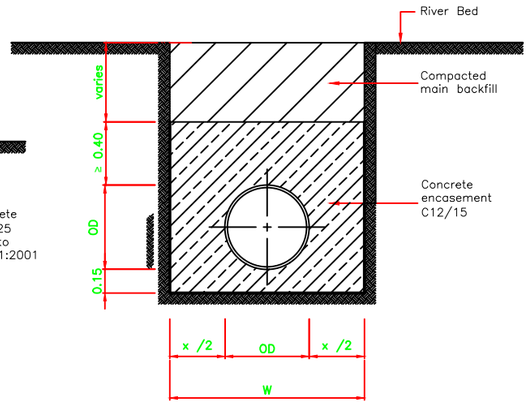

CONCRETE ENCASING AT WADI CROSSING

The minimum trench width (W) to be adapted shall always be the higher value resulting from the tables below

Minimum trench width in relation to trench depth

Trench depth (m)	W (m)
≥ 1.00	No minimum width required
> 1.00 ≤ 1.75	0.80
> 1.75 ≤ 4.00	0.90
> 4.00	1.00

Minimum trench width in relation to DN

DN	W (m) = OD + x
≤ 225	OD + 0.40
> 225 to ≤ 350	OD + 0.50
> 350 to ≤ 700	OD + 0.70
> 700 to ≤ 1200	OD + 0.85
> 1200	OD + 1.00

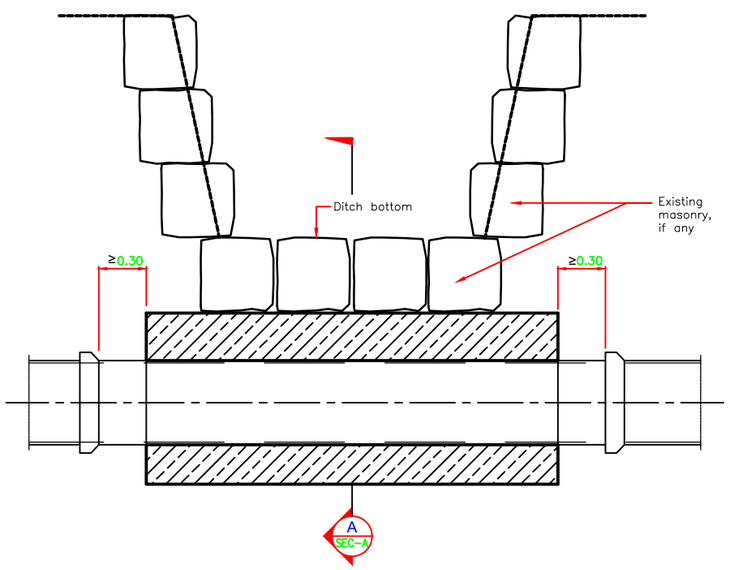

CROSSING OF DITCHES

REVISIONS

REV.No.	DATE	DESCRIPTION

Client

ATHI WATER WORKS DEVELOPMENT AGENCY

Project

NAIROBI SATELLITE TOWNS WATER AND SANITATION DEVELOPMENT PROGRAMME (PHASE 1)
MWIHOKO WATER SUPPLY PROJECT

CONTRACTOR

Posch+Partners consulting engineers in Association with Norken International Ltd

Drawing Title

TYPICAL TRENCHES, REINSTATEMENT DETAILS & STORM-WATER CHANNEL CROSSING

CHIEF ENGINEER AG		Designed by	EK
		Checked by	JW
Scale	AS SHOWN	Date	MARCH 2023
Job No.	P1596		
Status	DRAWING No.	MW04/SD/26	

GATE VALVE (FOR DN ≤ 300) IN PAVED ROADS

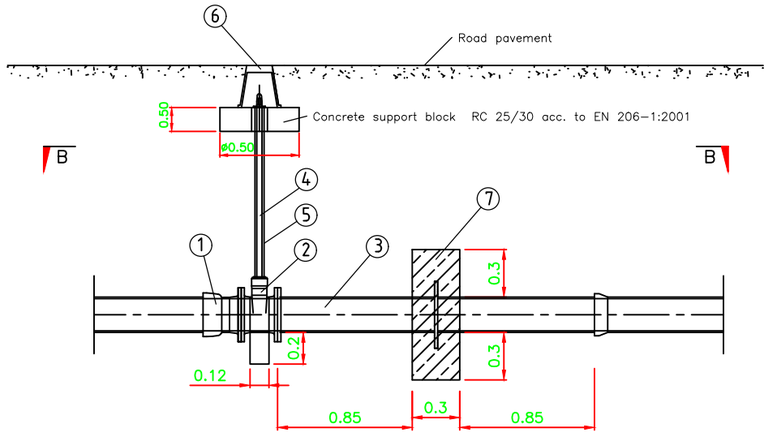

SECTION A–A

BUTTERFLY VALVE (FOR DN > 300) IN PAVED ROADS

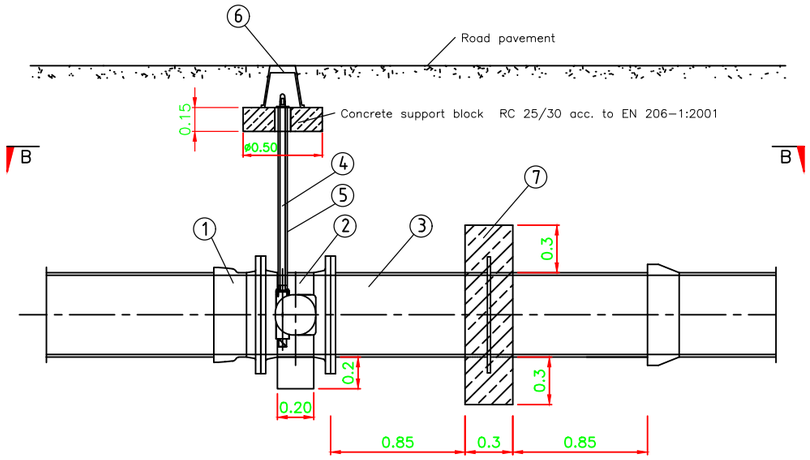

SECTION A–A

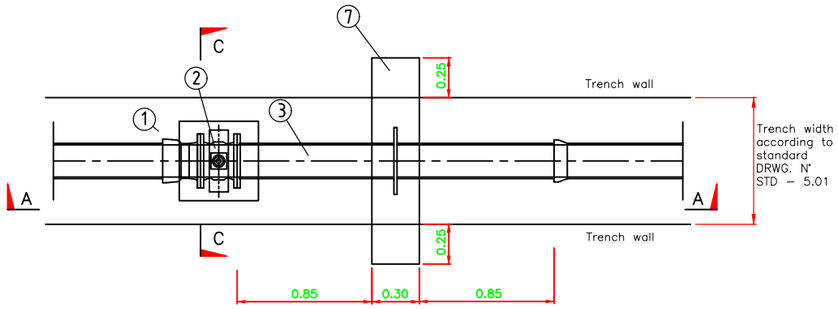

SECTION B–B

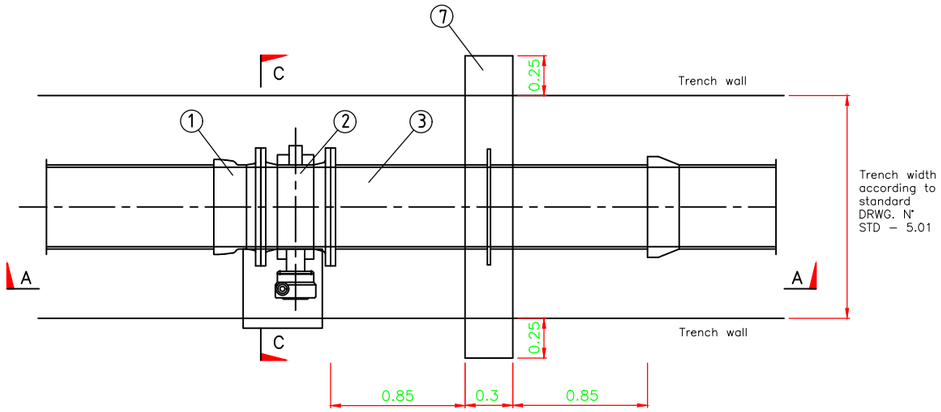

SECTION B–B

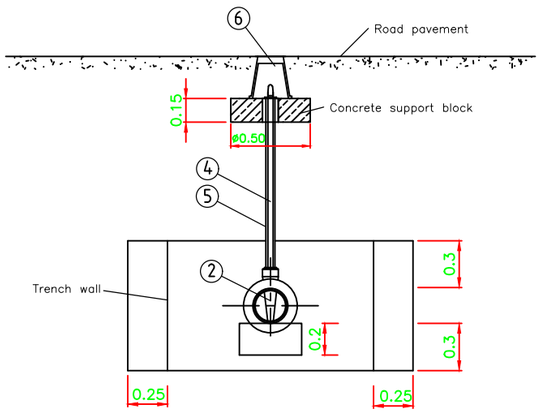

SECTION C–C

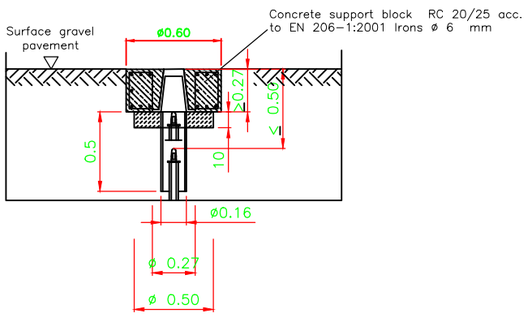

SECTION A–A

SURFACE BOX IN UNPAVED ROADS

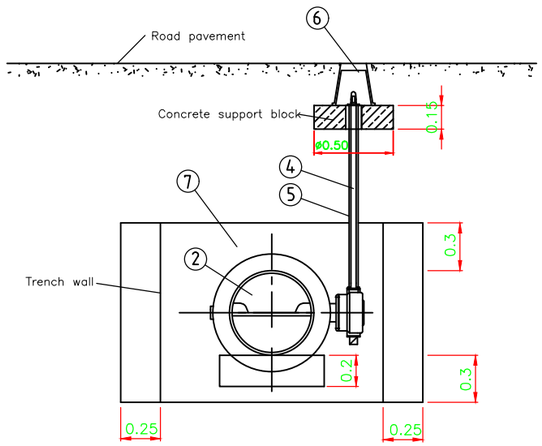

SECTION C–C

REVISIONS

REV.No.	DATE	DESCRIPTION

Client

ATHI WATER WORKS DEVELOPMENT AGENCY

Project

NAIROBI SATELLITE TOWNS WATER AND SANITATION DEVELOPMENT PROGRAMME (PHASE 1)
MWIHOKO WATER SUPPLY PROJECT

CONTRACTOR

Posch + Partners consulting engineers — in Association with — Norken International Ltd

Drawing Title

BURIED SECTIONAL VALVES

CHIEF ENGINEER AG	Designed by EK Checked by JW
Scale AS SHOWN	Date MARCH 2023
Job No. P1596	
Status	DRAWING No. MW04/SD/27

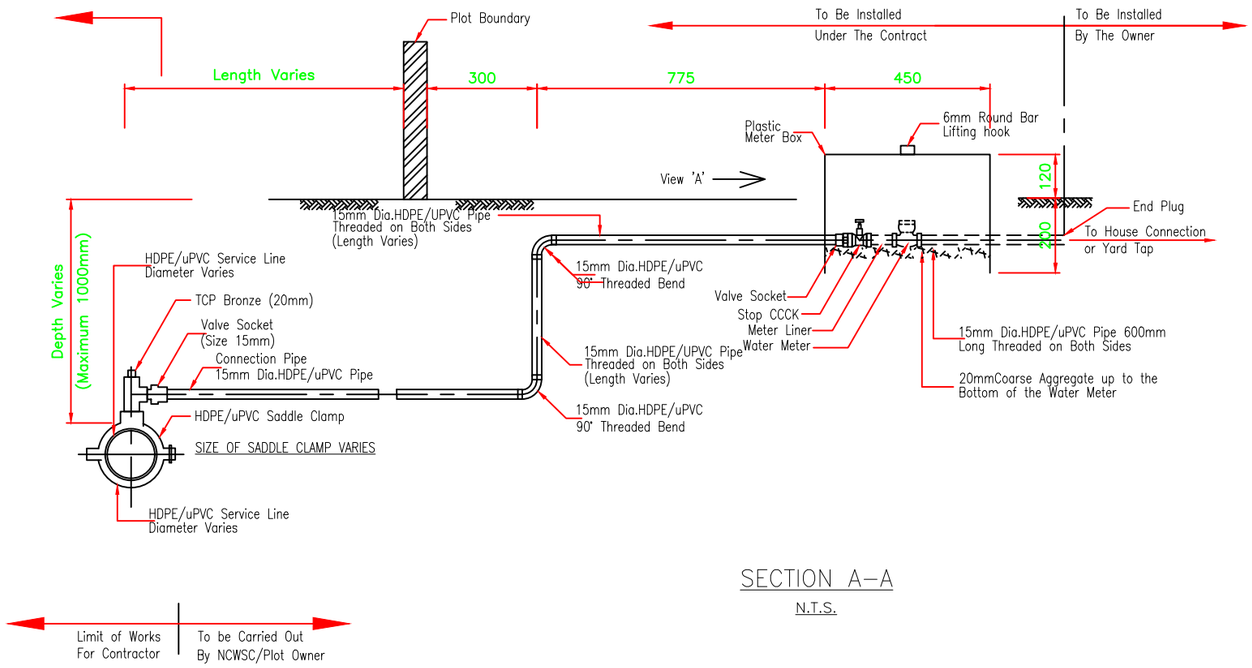

SECTION A–A

N.T.S.

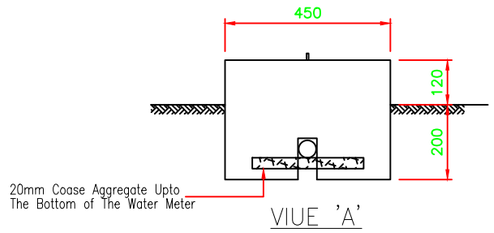

VIUE 'A'

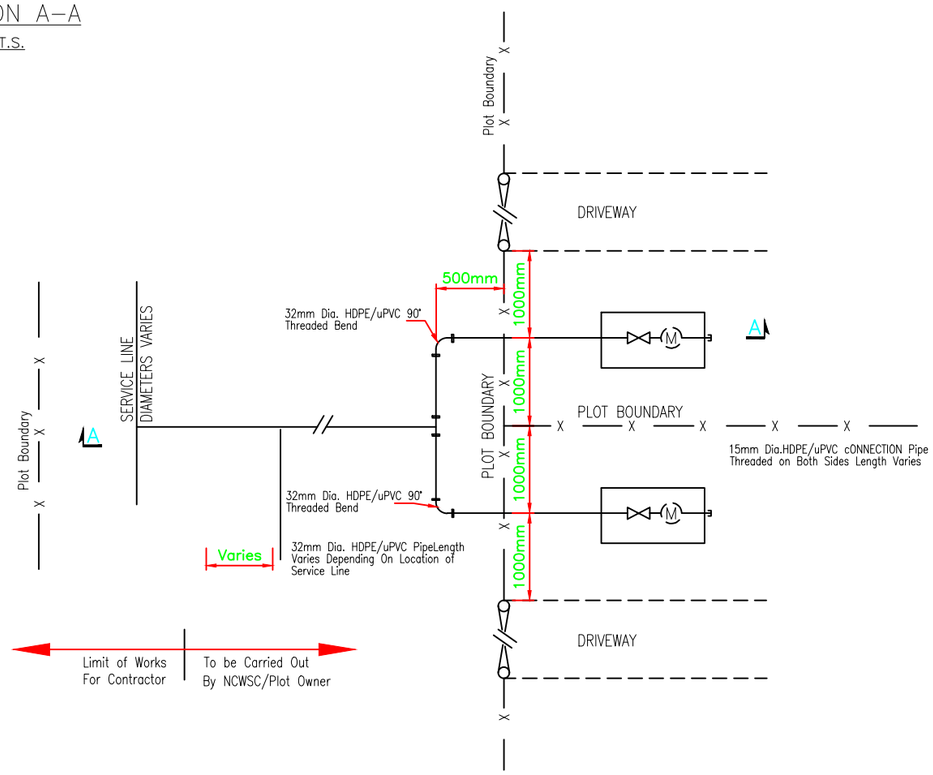

PLAN

TYPICAL CONSUMER CONNECTION ACROSS CARRIAGE WAY
FOR TWO HOUSEHOLDS ON A HDPE/uPVC SERVISE LINE

NOTE

All Dimensions Are in Millimeter Unlell Otherwise Stated.

ABBREVIATIONS

mm	–	Millimeters
GL	–	Ground Level
Dia.	–	Diameter
HDPE	–	High–Density Polyethylene
uPVC	–	Unplasticised Polyvinyl Chloride

REVISIONS

REV.No.	DATE	DESCRIPTION

Client

ATHI WATER WORKS DEVELOPMENT AGENCY

Project

NAIROBI SATELLITE TOWNS WATER AND SANITATION DEVELOPMENT PROGRAMME (PHASE 1)
MWIHOKO WATER SUPPLY PROJECT

CONTRACTOR

Posch + Partners consulting engineers
in Association with
Norken International Ltd

Drawing Title

TYPICAL DETAILS OF CONSUMER WATER SUPPLY CONNECTION

CHIEF ENGINEER	AG	Designed by	EK
		Checked by	JW
Scale	AS SHOWN	Date	MARCH 2023
Job No.	P1596		
Status	DRAWING No.	MW04/SD/28	

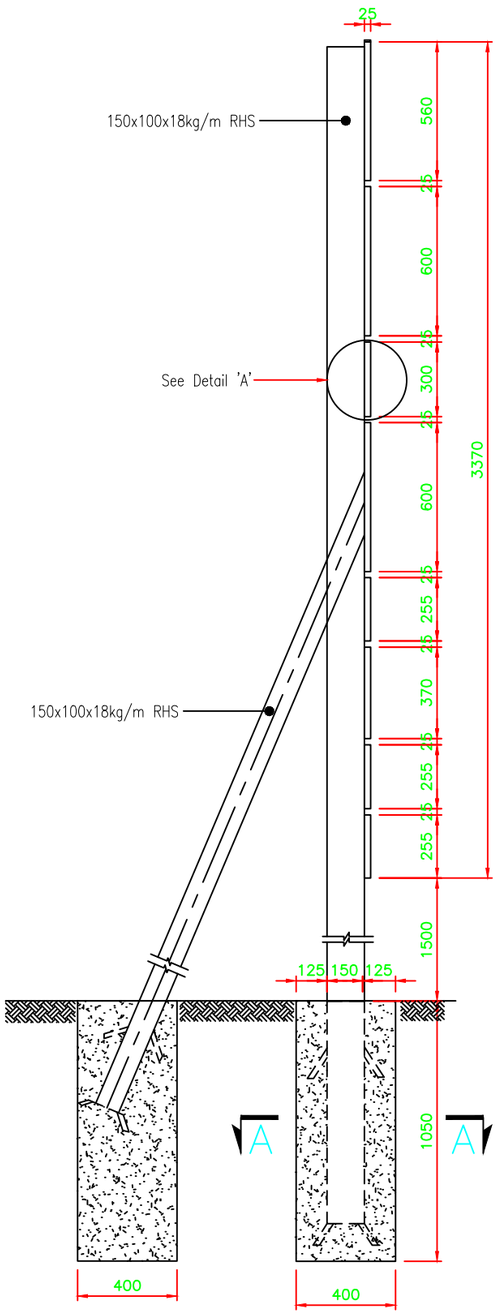

SIDE ELEVATION

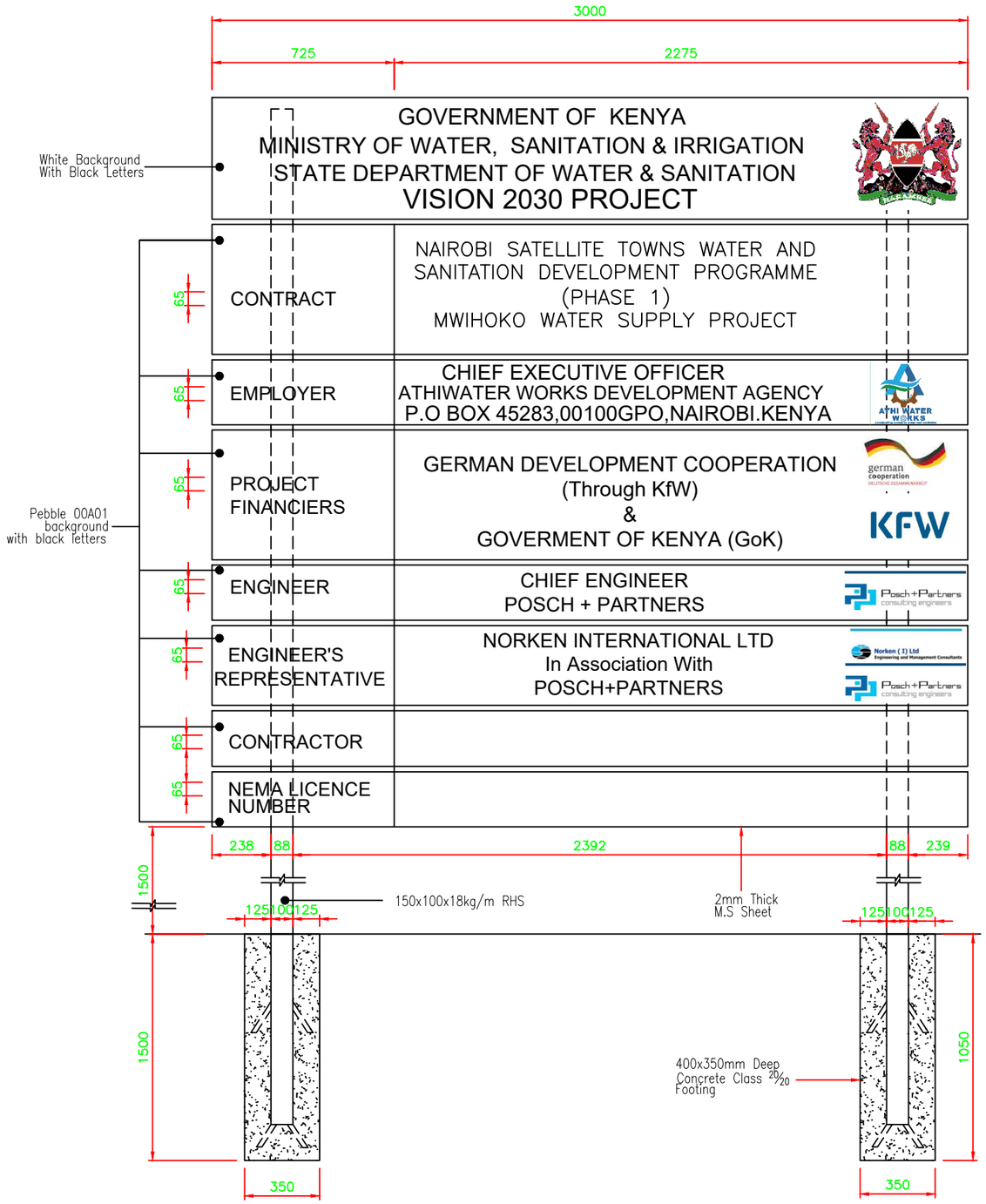

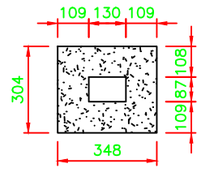

SECTION A–A

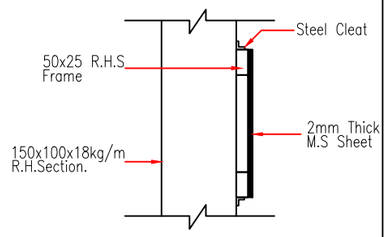

DETAIL 'A'
N.T.S.

NOTES

1. Final Wording onSign Board to be Decided and Approved in Consultation With The Employer Prior to Fabrication of the Sign Board.
2. Dimensions are in mm Unless Otherwise Stated.

REVISIONS

REV.No.	DATE	DESCRIPTION

Client

ATHI WATER WORKS DEVELOPMENT AGENCY

Project

NAIROBI SATELLITE TOWNS WATER AND SANITATION DEVELOPMENT PROGRAMME (PHASE 1)
MWIHOKO WATER SUPPLY PROJECT

CONTRACTOR

in Association with

Drawing Title

PROJECT SIGNBOARD

CHIEF ENGINEER AG	Designed by EK Checked by JW
Scale AS SHOWN	Date MARCH 2023
Job No. P1596	
Status	DRAWING No. MW04/SD/29

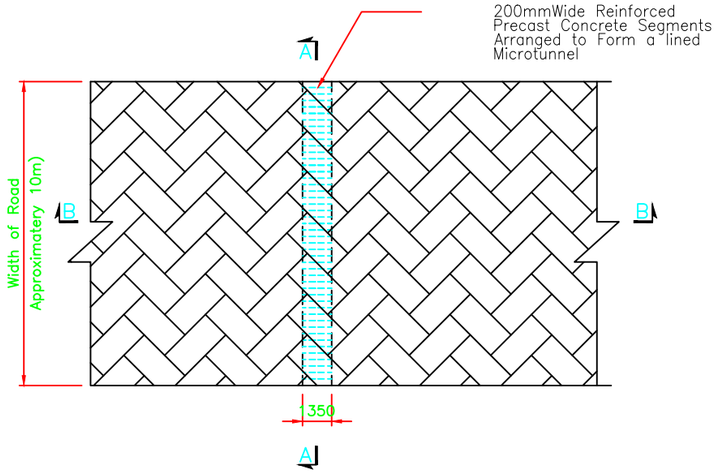

PLAN VIEW ON ROAD

Scale 1:200

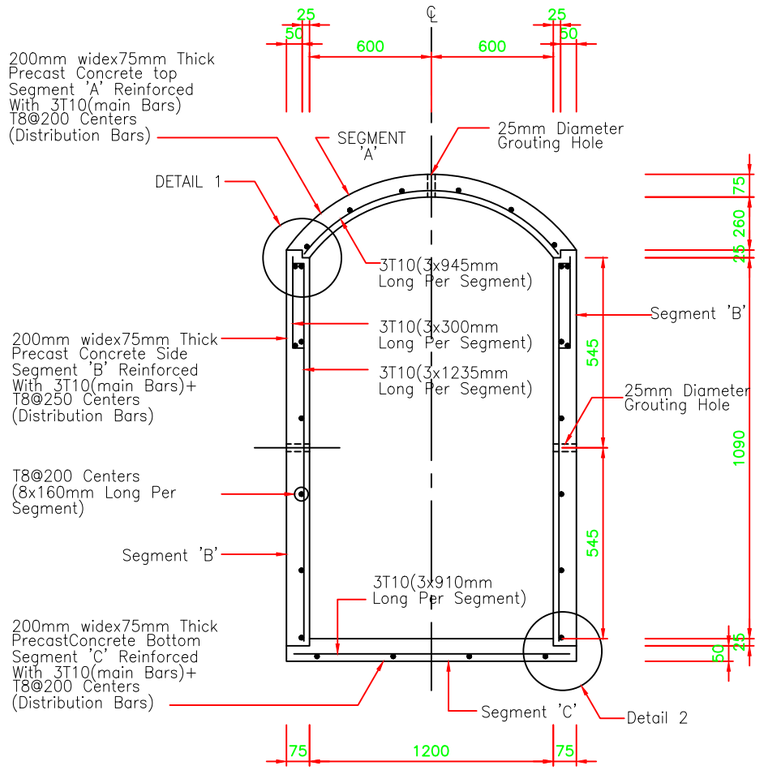

TUNNEL LINING DETAILS

Scale 1:20

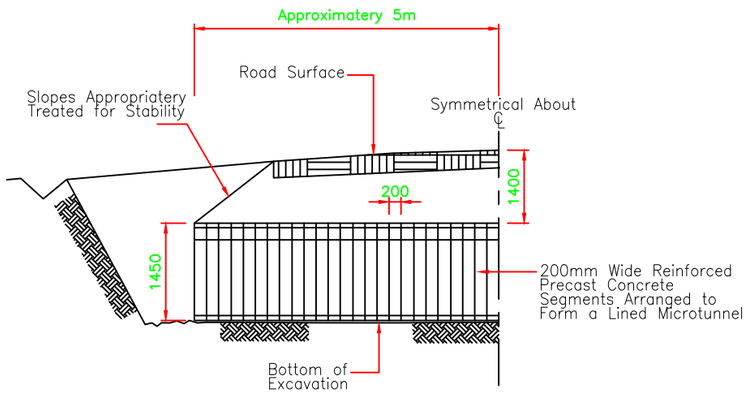

SECTION A–A

Scale 1:100

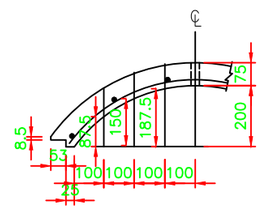

CROWN SEGMENT 'A' DETAILS

Scale 1:20

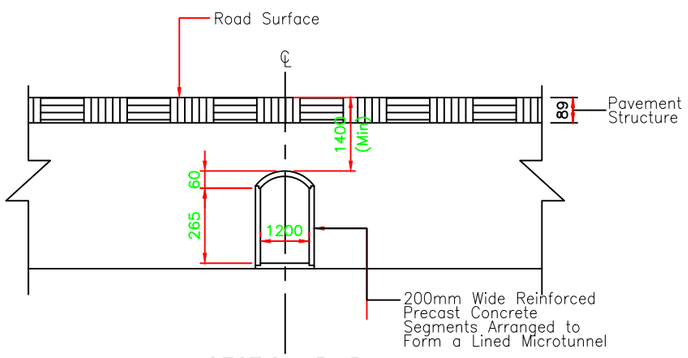

SECTION B–B

Scale 1:100

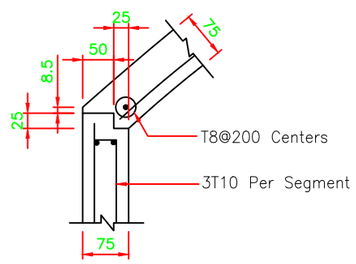

DETAIL 1

Scale 1:10

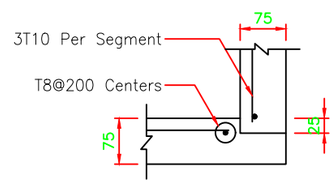

DETAIL 2

Scale 1:10

NOTES

1. All dimensions are in millimeters
2. Concrete to be grade C25 (Mix 1:1:2) with 20mm maximum size aggregate.
3. All high tensile (T) bars to be in accordance with BS 4449
4. Minmum laps to all bars to be 50xdiameter of bar
5. Minmum cover to all reinforcement from inside to be 20mm

SPECIFICATIONS

1. Typical details are suitable for soft material such as red coffee soil,clay soils and gravelly soils.
2. Sizes of segments to be increased only with the Engineers approval.
3. Intallation of the tunnel linings to be supervised by Engineer.
4. Precast segments designed for the following loading assumptions:

   –Traffic wheel load of 100KN directly above tunnel and applied on the pavement surface with a contact area of 300mmx300mm.
   –Uniform surcharge load of 20KN applied on pavement surface.
   –Minmum overburden to be 1400 from the road pavement surface to crown of tunnel.
   –Spaces behind precast concrete lining and excavation to be backfilled with concrete motar on completion of placing the segments.
   –Maximum length of tunnel to be excavated each time before installing the precast segments to be 500mm.
   –Crown segment of the tunnel lining to be of arch profile as per the setting out dimensions tabulated.
5. Typical weights of the segments;
   Segment A : 36Kg
   Crown segment B : 44Kg
   Bottom segment C : 34Kg

REVISIONS

REV.No.	DATE	DESCRIPTION

Client

ATHI WATER WORKS DEVELOPMENT AGENCY

Project

NAIROBI SATELLITE TOWNS WATER AND SANITATION DEVELOPMENT PROGRAMME (PHASE 1)
MWIHOKO WATER SUPPLY PROJECT

CONTRACTOR

Posch+Partners consulting engineers in Association with Norken International Ltd

Drawing Title

PRECAST TUNNEL LINING SEGMENTS

CHIEF ENGINEER	AG	Designed by	EK
		Checked by	JW
Scale	AS SHOWN	Date	MARCH 2023
Job No.	P1596		
Status	DRAWING No.	MW04/SD/30	

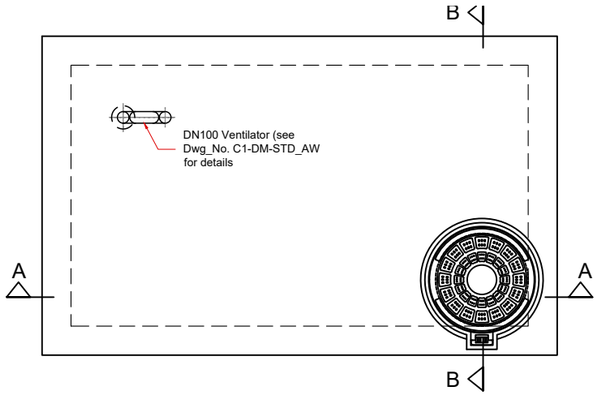

ROOF PLAN
Scale 1:25

PIPEWORK SCHEDULE																
DN "A"... DN of Pipeline																
DN "B"... DN of FM and PRV																
Item No.	Description	DN and Quantity														
		FM+PRV						FM								
Ductile cast iron fittings		Type 1		Type 1a)		Type 2		Type 1		Type 1a)		Type 2		Type 3		Type 3a)	
D1	D/FL Pipe, same length as FM	B	1	B	1	A	1										
D2	FL Tee	A/B	2	A/B	2	A	2										
D3	D/FL Pipe with central puddle FL	B	2	A	2	A	2	B	2	A	2	A	2	B	2	A	2
D4	D/FL Reducer	A/B	2	A/B	2			A/B	2	A/B	2			A/B	2	A/B	2
D5	D/FL Pipe, length varies	B	4	B	4	A	4	B	2	B	2	A	2	B	2	B	2
D6	D/FL Elbow 90°	B	2	B	2	A	2										
D7	D/FL Pipe with central puddle FL	B	2	B	2	A	2										
D8	Dismantling piece	B	2	B	2	A	2	B	1	B	1	A	1	B	1	B	1
Valves																	
V1	D/FL PRV	B	1	B	1	A	1										
V2	D/FL RSV	B	3	B	3	A	3	B	2	B	2	A	2	B	2	B	2
Appurtenances																	
A1	D/FL FM	B	1	B	1	A	1	B	1	B	1	A	1	B	1	B	1
A2	D/FL STR	B	1	B	1	A	1							B	1	B	1

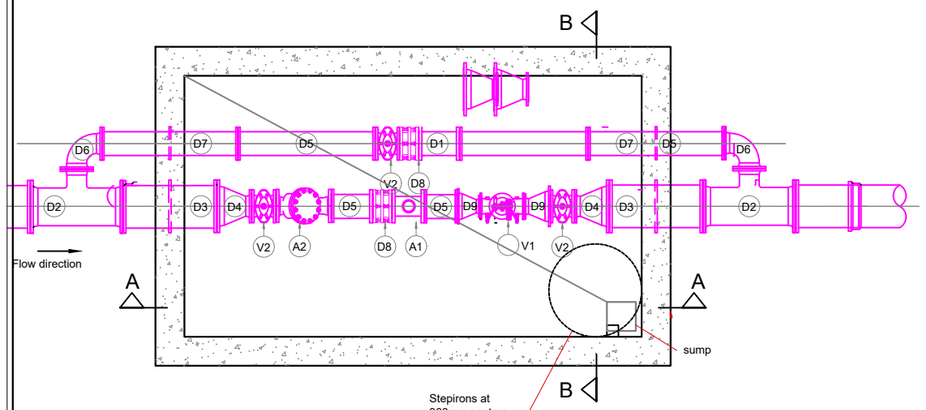

PLAN
Scale 1:25

DETAIL OF INTERCONNECTION MWA-1 CH 3+750

D1 - DN 150mm Double Flange Pipe Same Length as Flow meter
D2 - DN 500X150mm FLANGED TEE
D3 - DN 500 Double Flanged Pipe with Central Paddle
D4 - DN 500 x 150mm Flanged Taper
D5 - DN 150mm Double Flange Pipe,0.5m Long
D6 - DN 150mm 90 degree bends
D7 - DN 150mm Double Flange Pipe with Paddle
D8 - DN 150mm DOUBLE FLANGED PIPE, 1M LONG
D9 - DN 150x125mm Taper

V1 - 125mm PRV
V2 - DN 150mm GATE VALVE

A1 - DN 150mm FLOW METER
A2 - DN 125mm STRAINER

DETAIL OF INTERCONNECTION MWA-1 CH 6+900

D1 - DN 150mm Double Flange Pipe Same Length as Flow meter
D2 - DN 300X150mm FLANGED TEE
D3 - DN 300 Double Flanged Pipe with Central Paddle
D4 - DN 300 x 150mm Flanged Taper
D5 - DN 150mm Double Flange Pipe,0.5m Long
D6 - DN 150mm 90 degree bends
D7 - DN 150mm Double Flange Pipe with Paddle
D8 - DN 150mm DOUBLE FLANGED PIPE, 1M LONG
D9 - DN 150x50mm Flanged Taper

V1 - 50mm PRV
V2 - DN 150mm GATE VALVE

A1 - DN 150mm FLOW METER
A2 - DN 125mm STRAINER

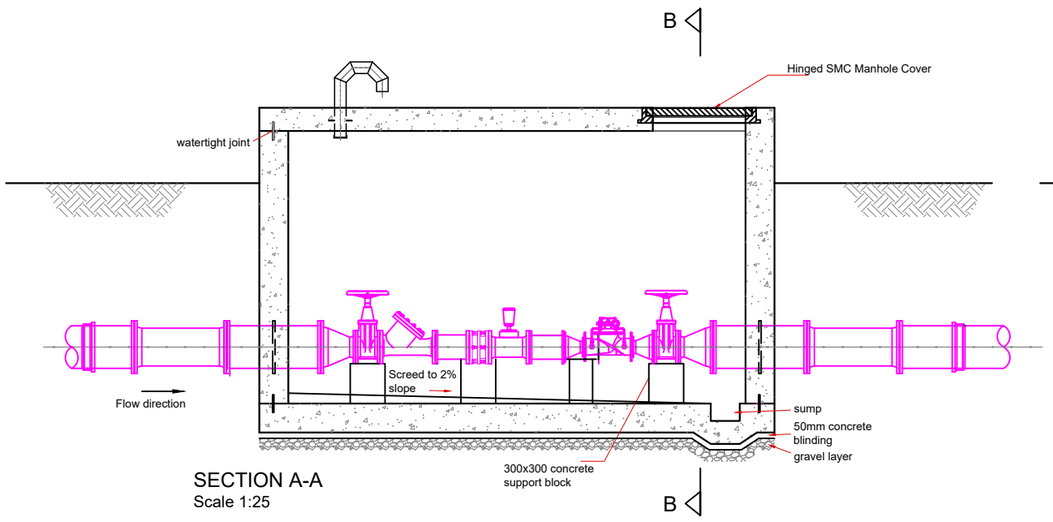

SECTION A-A
Scale 1:25

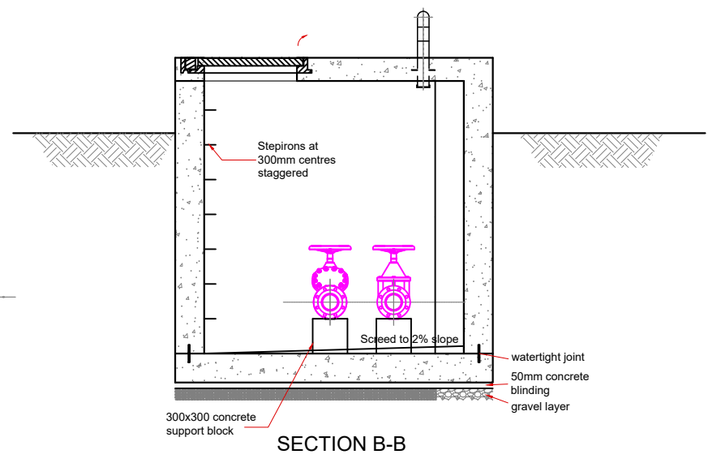

SECTION B-B
Scale 1:25

NOTES.
1.All dimensions in millimeters unless otherwise stated.
2.All fabric reinforcements should conform to BS 4483.
3.All concrete to be class'20' unless otherwise stated.
4.All steel manhole covers to be plaited after fabrication with two coats of Zinc based primer followed by two coats of Epoxide-resin paint.
5.Minimum cover to all reinforcements to be 40mm.
6.Additional riser pieces to be used as directed by the Engineer's representative.
7.Compaction to trench fill around sluice valve chambers to be carried out as directed by the Engineer's representative.

LEGEND
F.G.L.-Finished Ground Level.
F.C.-Flexible Coupling

REVISIONS

REV.No.	DATE	DESCRIPTION

Client
ATHI WATER WORKS DEVELOPMENT AGENCY

Project
NAIROBI SATELLITE TOWNS WATER AND SANITATION DEVELOPMENT PROGRAMME (PHASE 1)
MWIHOKO WATER SUPPLY PROJECT

CONTRACTOR
Posch+Partners consulting engineers
in Association with
Norken International Ltd

Drawing Title
FLOW METER CHAMBER DETAILS

CHIEF ENGINEER AG	Designed by EK Checked by JW
Scale	Date MARCH 2023
Job No.	
Status	DRAWING No. MW04/SD/31